- Easy Integration of SIMRC Cards for Custom Applications
- Utilizes SIMRC Cards From The Series 1010/1020/1030
- RS-232 Interface
- Standard Subminiature 50-pin and 9-pin D-type Connectors
- Allows Cascading of Multiple Carriers for Building Switching Networks
- Eurocard Format
- Soft Front Panel Supplied
- CVI/LabVIEW/DLL Support
- 3 Year Warranty

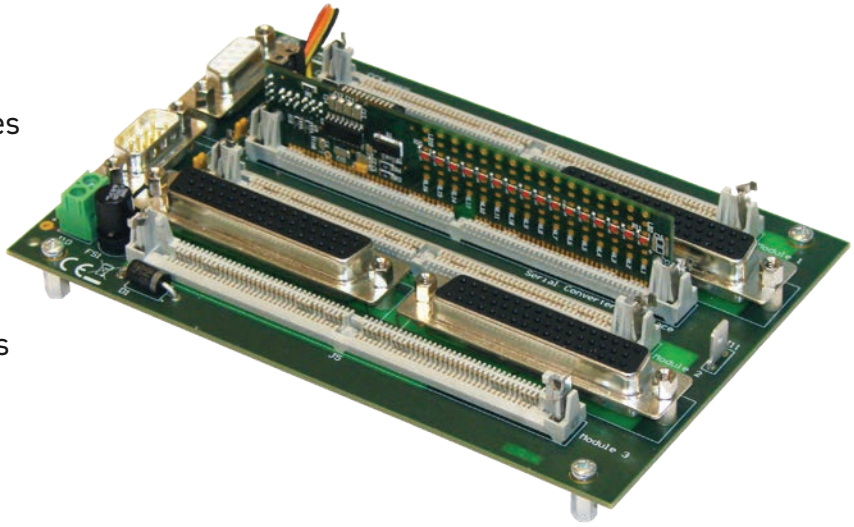

1050-002 SIM Relay Card Carrier Kit (1050-001 SIM Relay Card Carrier With 1080-001 Serial Interface Card Fitted)

The SIM Relay Carrier 1050 simplifies the custom integration of SIMRC switching cards. No additional PCB design is necessary. Due to the Eurocard format the carrier can be fitted into a standard case or can be mounted in a 19" rack with side rails.

Plug in standard SIM relay cards and control your switch application with the provided Soft Front Panel without any additional programming.

General Specification

Can be fitted with a maximum of 3 switching cards from the 1010/1020/1030 SIMRC range. The fourth card position is dedicated for a 1080-001 RS-232 to I²C converter card.

Soft Front Panel

The supplied Soft Front Panel allows easy control of individual relays either in binary (button) or hex input.

One panel controls all SIMRC types, there is also automatic module type detection and relay status read back.

Programming

As well as the Soft Front Panel, the SIMRC Carrier is supplied with a Windows 2000/XP driver (CVI FP/ LabVIEW LLB/DLL) which performs the following functions:

- Communication port handling
- Card identification
- Write/Read bit to card (to operate an individual relay)
- Write/Read relay pattern

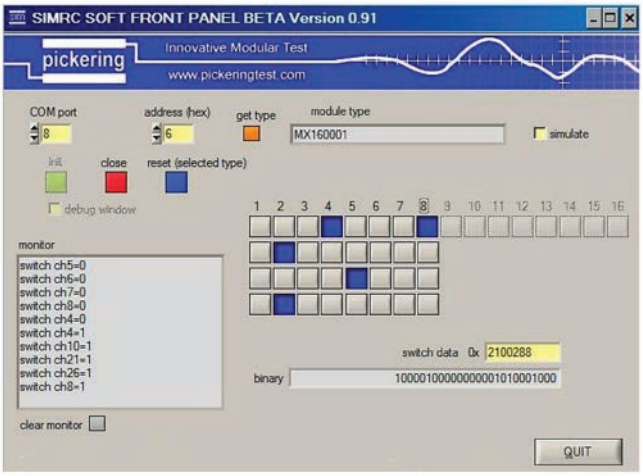

Soft Front Panel Supplied With The Card Carrier

ISSUE 4.0 SEP 2023

Pin Connections Between The SIM Relay Card And 50-pin D-Type Connector

SIM Module Pin Number	50-pin D-Type Pin Number	1010-R-16-1-5/1D 16 x SPST Reed	1010-R-16-1-5/3D 16 x SPDT Reed	1010-R-16-1RF-5/1D 16 x SPDT RF Reed	1020-R-16-1-5/1D 16 Channel MUX 1-pole	1020-R-16-2-5/1D 16 Channel MUX 2-pole	1020-R-16-1RF-5/1D 16 Channel MUX 1-pole RF	1030-R-8-2-1-5/1D 8x2 Matrix 1-pole	1030-R-8-2-2-5/1D 8x2 Matrix 2-pole	1030-R-8-2-1RF-5/1D 8x2 Matrix 1-pole RF	1030-R-8-4-1-5/1D 8x4 Matrix 1-pole	1030-R-8-4-2-5/1D 8x4 Matrix 2-pole	1030-R-8-4-1RF-5/1D 8x4 Matrix 1-pole RF
1	49	A1	A1	A1	1	1.1	1	X1	X1.1	X1	X1	X1.1	X1
2	33	—	B1	S1	—	1.2	S	—	X1.2	S	—	X1.2	S
3	16	C1	C1	C1	2	2.1	2	X2	X2.1	X2	X2	X2.1	X2
4	48	A2	A2	A2	—	2.2	S	—	X2.2	S	—	X2.2	S
5	32	—	B2	S2	3	3.1	3	X3	X3.1	X3	X3	X3.1	X3
6	15	C2	C2	C2	—	3.2	S	—	X3.2	S	—	X3.2	S
7	47	A3	A3	A3	4	4.1	4	X4	X4.1	X4	X4	X4.1	X4
8	31	—	B3	S3	—	4.2	S	—	X4.2	S	—	X4.2	S
9	14	C3	C3	C3	5	5.1	5	X5	X5.1	X5	X5	X5.1	X5
10	46	A4	A4	A4	—	5.2	S	—	X5.2	S	—	X5.2	S
11	30	—	B4	S4	6	6.1	6	X6	X6.1	X6	X6	X6.1	X6
12	13	C4	C4	C4	—	6.2	S	—	X6.2	S	—	X6.2	S
13	45	A5	A5	A5	7	7.1	7	X7	X7.1	X7	X7	X7.1	X7
14	29	—	B5	S5	—	7.2	S	—	X7.2	S	—	X7.2	S
15	12	C5	C5	C5	8	8.1	8	X8	X8.1	X8	X8	X8.1	X8
16	44	A6	A6	A6	—	8.2	S	—	X8.2	S	—	X8.2	S
17	28	—	B6	S6	9	9.1	9	—	—	—	—	—	—
18	11	C6	C6	C6	—	9.2	S	—	—	—	—	—	—
19	43	A7	A7	A7	10	10.1	10	—	—	—	—	—	—
20	27	—	B7	S7	—	10.2	S	—	—	—	—	—	—
21	10	C7	C7	C7	11	11.1	11	—	—	—	—	—	—
22	42	A8	A8	A8	—	11.2	S	—	—	—	—	—	—
23	26	—	B8	S8	12	12.1	12	—	—	—	—	—	—
24	9	C8	C8	C8	—	12.2	S	—	—	—	—	—	—
25	41	A9	A9	A9	13	13.1	13	—	—	—	—	—	—
26	25	—	B9	S9	—	13.2	S	—	—	—	—	—	—
27	8	C9	C9	C9	14	14.1	14	—	—	—	—	—	—
28	40	A10	A10	A10	—	14.2	S	—	—	—	—	—	—
29	24	—	B10	S10	15	15.1	15	Y1	Y1.1	Y1	Y1	Y1.1	Y1
30	7	C10	C10	C10	—	15.2	S	—	Y1.2	S	—	Y1.2	S
31	39	A11	A11	A11	16	16.1	16	Y2	Y2.1	Y2	Y2	Y2.1	Y2
32	23	—	B11	S11	—	16.2	S	—	Y2.2	S	—	Y2.2	S
33	6	C11	C11	C11	—	—	—	—	—	—	Y3	Y3.1	Y3
34	38	A12	A12	A12	—	—	—	—	—	—	—	Y3.2	S
35	22	—	B12	S12	C	C.1	C	—	—	—	Y4	Y4.1	Y4
36	5	C12	C12	C12	—	C.2	S	—	—	—	—	Y4.2	S
37	37	A13	A13	A13	—	—	—	—	—	—	—	—	—
38	21	—	B13	S13	—	—	—	—	—	—	—	—	—
39	4	C13	C13	C13	—	—	—	—	—	—	—	—	—
40	36	A14	A14	A14	—	—	—	—	—	—	—	—	—
41	20	—	B14	S14	—	—	—	—	—	—	—	—	—
42	3	C14	C14	C14	—	—	—	—	—	—	—	—	—
43	35	A15	A15	A15	—	—	—	—	—	—	—	—	—
44	19	—	B15	S15	—	—	—	—	—	—	—	—	—
45	2	C15	C15	C15	—	—	—	—	—	—	—	—	—
46	34	A16	A16	A16	—	—	—	—	—	—	—	—	—
47	18	—	B16	S16	—	—	—	—	—	—	—	—	—
48	1	C16	C16	C16	—	—	—	—	—	—	—	—	—

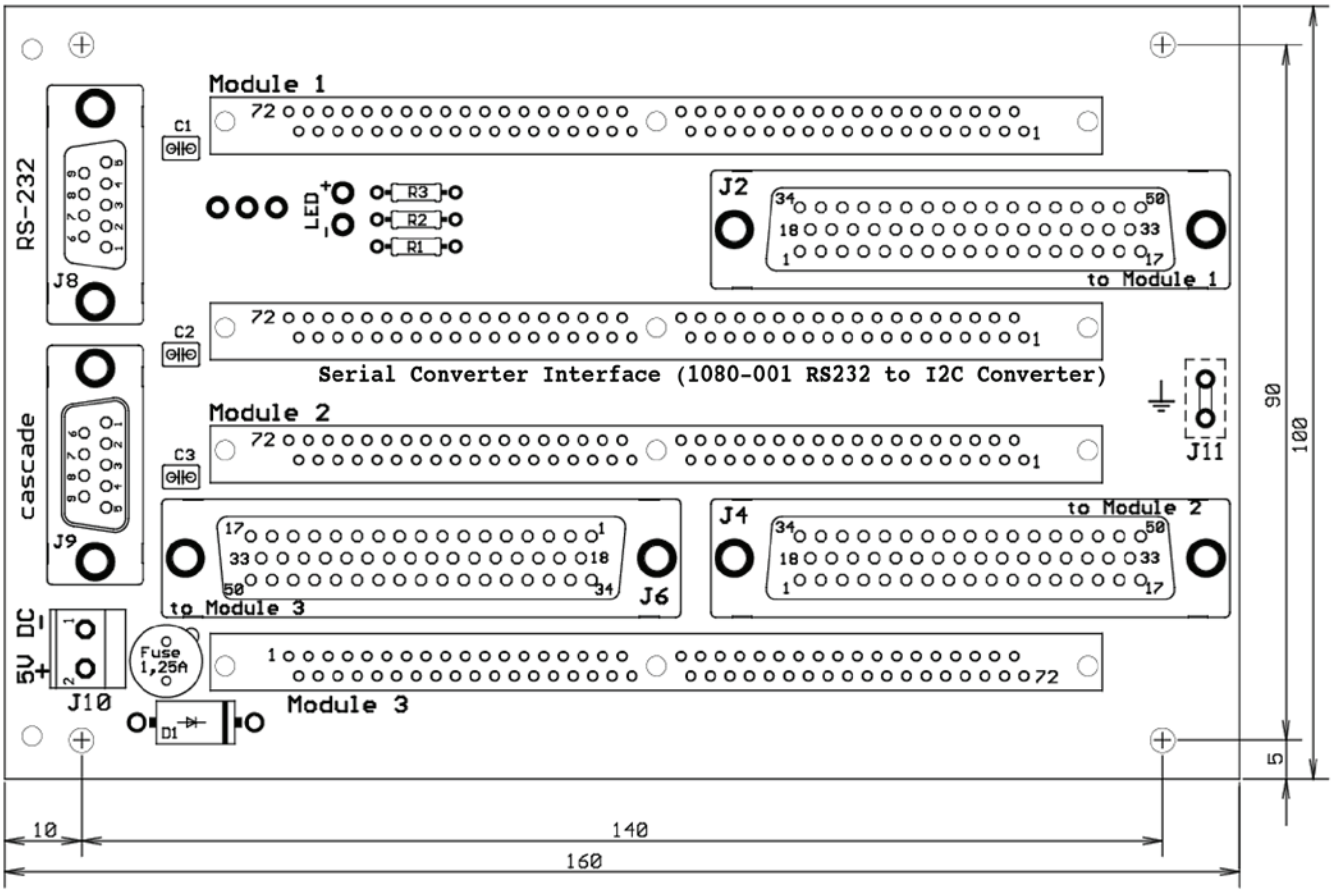

Dimensions Of The SIM Relay Card Carrier

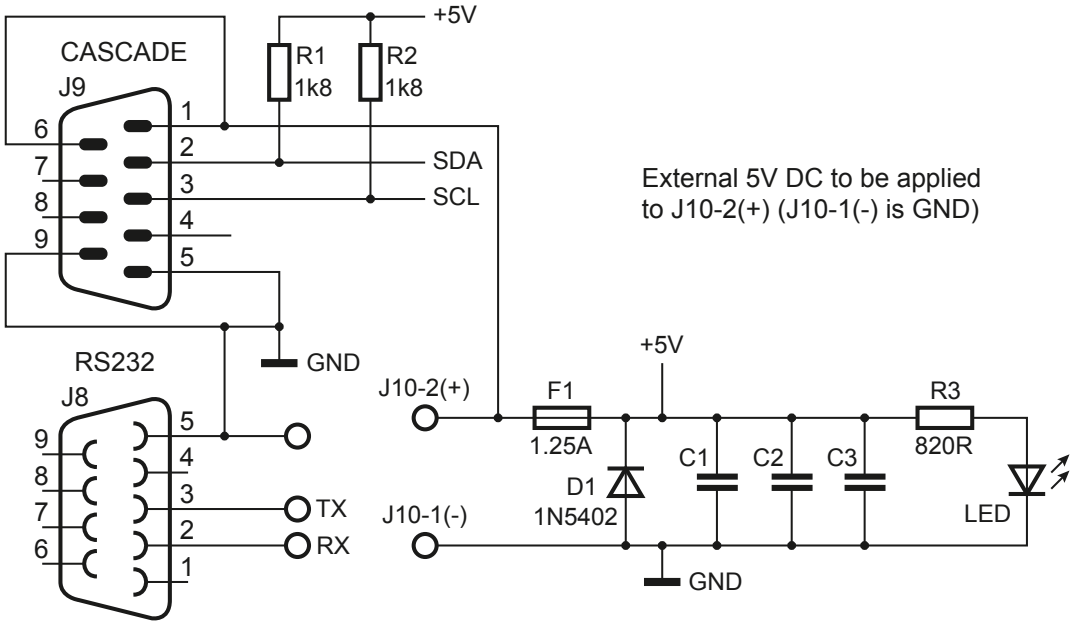

Schematic Diagram Of The Serial Data And Power Connections Of The SIM Relay Card Carrier

Power Supply Specification

+5V DC, protected with a 1.25A fuse (TR5 type).

Current consumption (no SIMRC Modules, only 1080-001 installed): Typically 25mA.

Maximum current (fully populated, no relays energized): 85mA.

Maximum current per energized relay: 18mA.

Width and Dimensions

Eurocard format, maximum height between 32mm and 48mm (dependent upon installed SIM Relay Cards).

Connectors

Switching signals via 50-pin female subminiature D-type connectors (each SIM Relay Card has its own connector), RS-232 interface via a 9-pin female subminiature D-type connector. Power supply via 2-pole screwed Phoenix-Contact connector type. Mating connectors are provided.

Installing the RS-232 to I²C Converter

To install the 1080-001 converter on to the carrier, plug the module into the socket marked "Serial Converter Interface" and connect the RS-232 cable as shown in the picture below.

SIMRC Module Address Setting

A detailed description of the DIP switch address settings can be found in the SIMRC 1000 User Manual, Section 5 "I²C Address Setting".

Operating/Storage Conditions

Operating Conditions

Operating Temperature:	0°C to +55°C
Humidity:	Up to 90% non-condensing
Altitude:	5000m

Storage and Transport Conditions

Storage Temperature:	-20°C to +75°C
Humidity:	Up to 90% non-condensing
Altitude:	15000m

Product Order Codes

SIM Relay Card Carrier PCB Including mating connectors 3xmale 50-pin D-types and 1xfemale 9-pin D-type.	**1050-001**
SIM Relay Card Carrier Kit Including RS-232 to I²C Converter (1080-001) and mating connectors.	**1050-002**
RS-232 to I²C Converter Module	**1080-001**

Latest Details

Please refer to our web site for latest product details:
pickeringtest.com

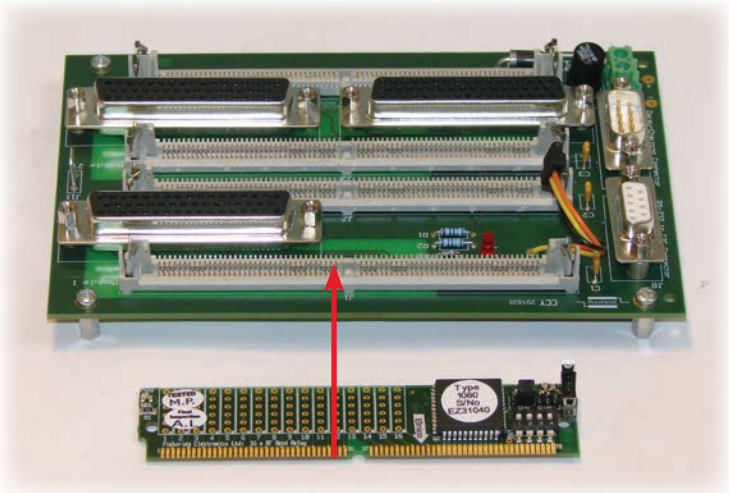

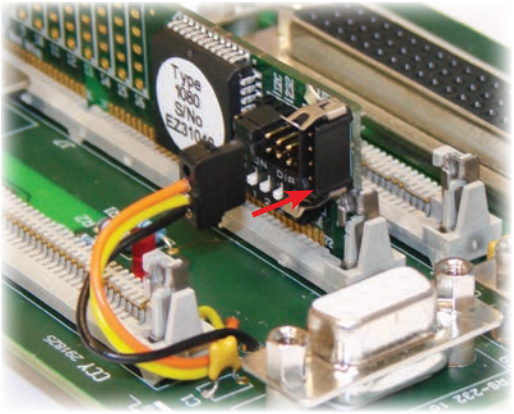

Installation Of The 1080-001 Converter Card on to The Card Carrier

© Copyright (2023) Pickering Interfaces. All Rights Reserved
Pickering Interfaces maintains a commitment to continuous product development, consequently we reserve the right to vary from the description given in this data sheet.