1092
SIM Reed Relay Card RF Adapter, 50Ohm/75Ohm

Model 1092-001 is a special RF adapter for use with the 1010-R-16-1RF-5/1D RF Switching card, all connections are via 50Ω SMB connectors.

The adapter allows the SIMRC to be configured in various multiplexer configurations. The base configuration is a quad 4 channel RF multiplexer, but this can be expanded to 8, 12 or 16 channels.

The maximum RF performance is achieved in 4 channel mode. RF performance will reduce when the number of channels is increased.

The 1092-001 RF Adapter has 50Ω SMB connectors, but it has been designed for use at either 50Ω or 75Ω. RF Plots for both these impedances are on page 3.

This data sheet contains information on just the RF adapter PCB, please refer to the SIMRC Data Sheet for further information on the 1010-R-16-1RF-5/1D RF Switch Card.

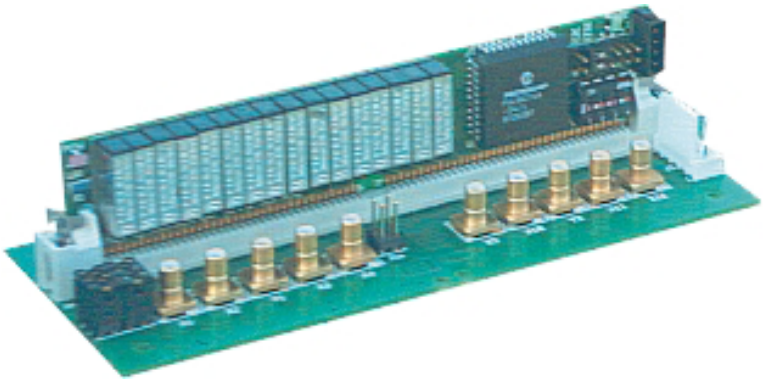

RF Adapter Card with SIM Relay Card Inserted

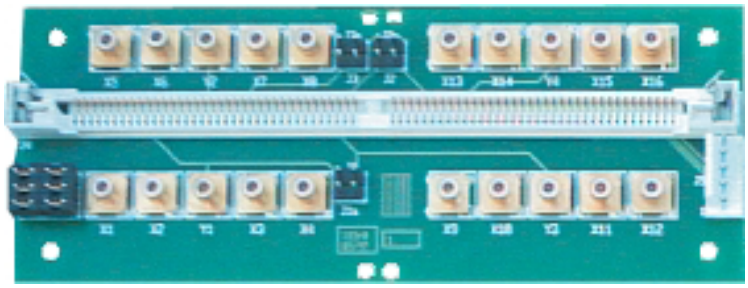

Special RF Adapter Card with SIM Connector, type 1092-001

16 x SPST RF Reed Relay SIM, type 1010-R-16-1RF-5/1D

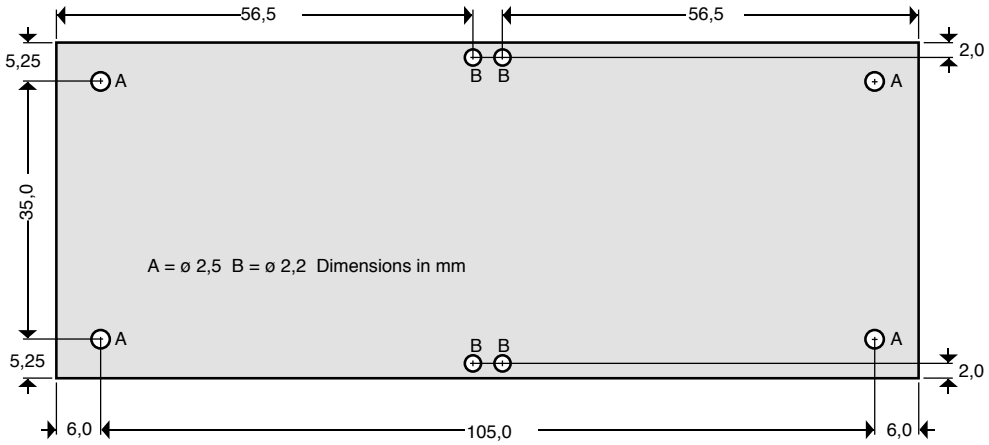

Dimensional Diagram of 1092 RF Adapter PCB

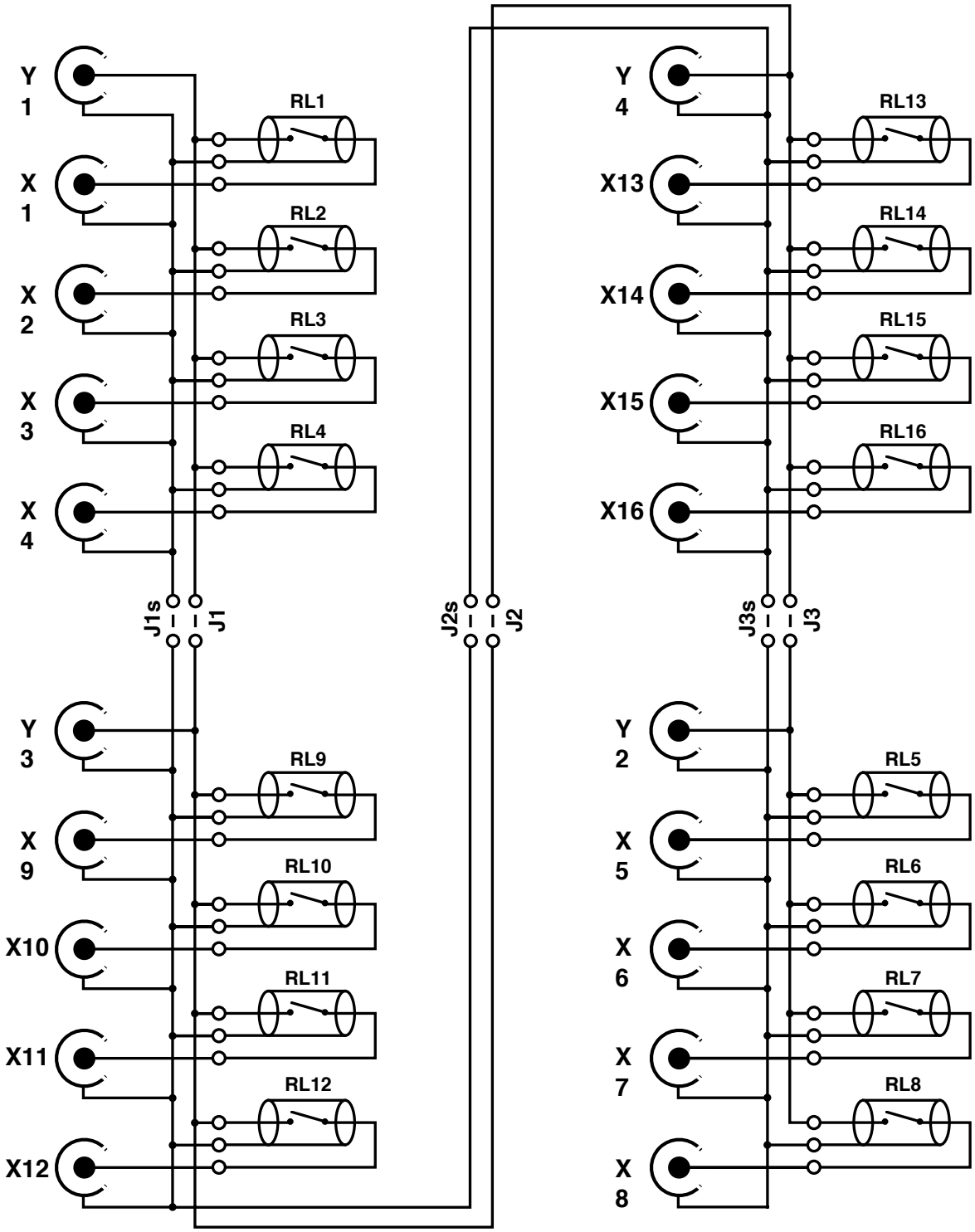

Circuit Diagram For 1092 RF Adapter PCB (Used with 1010-R-16-1RF-5/1D RF Switch Card)

RF Specification For Coaxial Versions

4 Channel Multiplexer (50Ω and 75Ω)

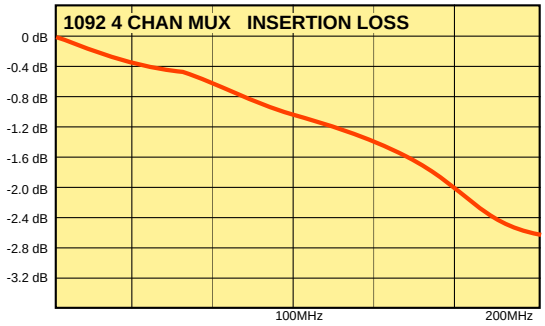

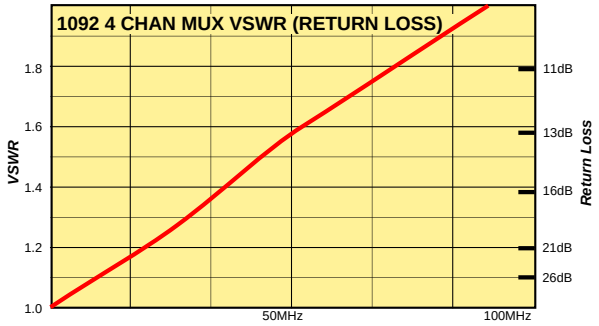

8 Channel Multiplexer (50Ω and 75Ω)

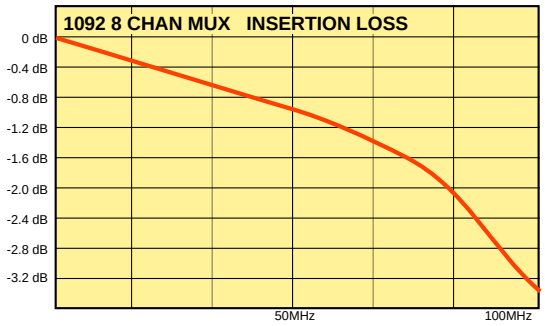

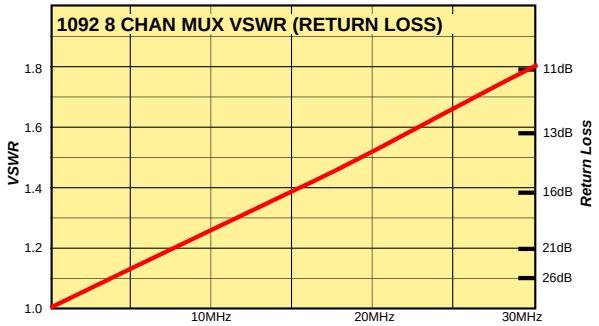

16 Channel Multiplexer (50Ω and 75Ω)

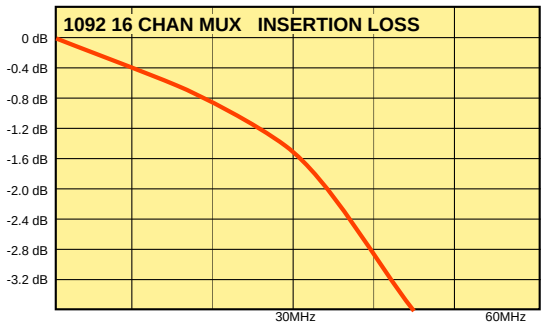

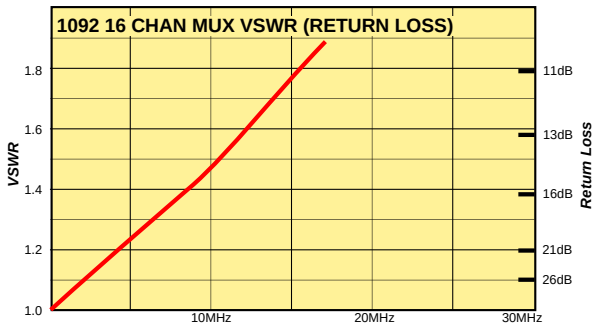

Crosstalk and Isolation (50Ω and 75Ω) - All Configurations

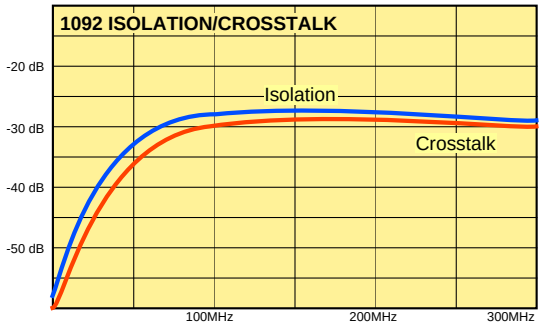

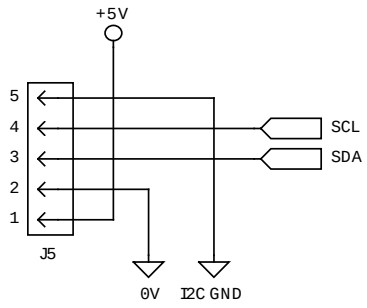

J5 Pin Definition

Maximising RF Performance

SIMRC modules have best RF performance (insertion loss and return loss) when used in 4 channel mode. So if a large multiplexer is required with maximum RF performance it should be constructed using 4 channel "building blocks", refer to diagram below.

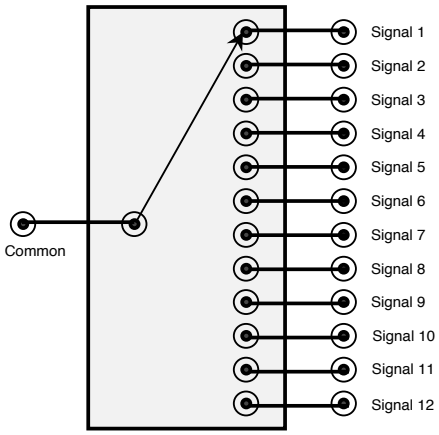

12 Channel Multiplexer Configuration

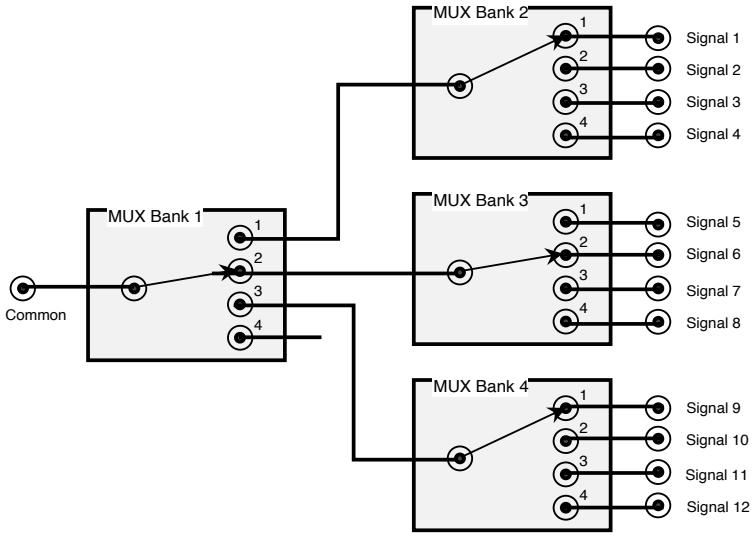

12 Channel Multiplexer Configuration With Improved RF Performance

Product Order Code

1092-001	RF PCB with 72 Pin SIM Socket for use with 1010-R-16-1RF-5/1D. See separate data sheet.

Pickering Interfaces Ltd.
Stephenson Road
Clacton–on–Sea
Essex
England.
CO15 4NL

Tel: +44 1255-428141
Fax: +44 1255-475058
E mail: sales@pickeringswitch.com
Internet: www.pickeringswitch.com

Pickering Interfaces maintains a commitment to continuous product development, consequently we reserve the right to vary from the description given in this data sheet.