PXI High Density Relay Module 40-145/146/148

- SPST - 50, 75 or 100 Relays Per Module
- DPST - 25 or 50 Relays Per Module
- SPDT - 32, 48 or 64 Relays Per Module
- SPST Normally Closed - 50, 75 or 100 Relays Per Module
- Electro-mechanical High Density Relays
- Pin Compatible With Alternative 40-140A Reed Relay Modules
- Operating Speed 3 ms Typical
- Switching up to 150 V/1 A/60 W
- Single PCB Construction With Leaded Relays Allows Easy Maintenance
- Drivers Supplied for Windows & Linux, Plus Support for Real-time Systems
- Supported by PXI or LXI Chassis
- Supported by ***eBIRST*** ™
- 3 Year Warranty

The 40-145/146/148 range of high density switching modules are available in Normally Open (SPST & DPST), Changeover (SPDT) and Normally Closed (SPST) configurations. Connections are made via a front panel 200-pin female connector.

General purpose reed relays are suitable for the construction of small switch networks, I/O port switching, for controlling larger relays or for operating external devices such as lamps and solenoids.

Range Description:

- 40-145 50, 75 or 100 x SPST Relays (NO or NC)
- 40-146 25 or 50 x DPST Relays
- 40-148 32, 48 or 64 x SPDT Relays

Supported by *eBIRST*

eBIRST switching system test tools simplify switching system fault-finding by quickly testing the system and graphically identifying the faulty relay. For more information go to: pickeringtest.com/ebirst

High Density 200-pin Connector

We have a range of connector solutions for the 200-pin connector used on the 40-145/146/148 series of modules. These include mating connectors, pre-made cable assemblies and cable assemblies that break out the 200 conductors into more manageable 50-pin transition connectors. Please refer to our web site for more details or the Interconnection Solutions Catalog.

This product is based on the obsolete Molex LFH series connector that has been superseded by a Pickering commissioned form, fit, function equivalent. The new connector series is 100% compatible with the Molex connectors allowing either gender of Pickering connector to mate with the corresponding Molex part without issue..

Choice of Signal Relay Types

40-145/146/148 series modules are fitted with electro-mechanical relays (palladium-ruthenium, gold covered) offering good general purpose performance, switching times of 3 ms and are lower cost than instrumentation grade reed relays. Overall they offer a good general purpose choice.

Reed Relays (sputtered ruthenium type) which are designed solely for high-end instrumentation applications are used in series 40-140A/141/142/143 modules, they offer very long life up to 1000 million operations, fast operate time of 0.25ms and exceptional low level switching performance. Reed Relays are hermetically sealed so ensuring consistent and stable contact resistance with long life. All of the reed relays used in our PXI modules are manufactured by our Relay Division: www.pickeringrelay.com

Pin Compatibility. 40-140A & 40-145 series modules are 100% pin compatible (except shielded types) allowing use of either module type in your test system.
Exactly which type to select depends on your application, if in doubt please contact your nearest Pickering sales office.

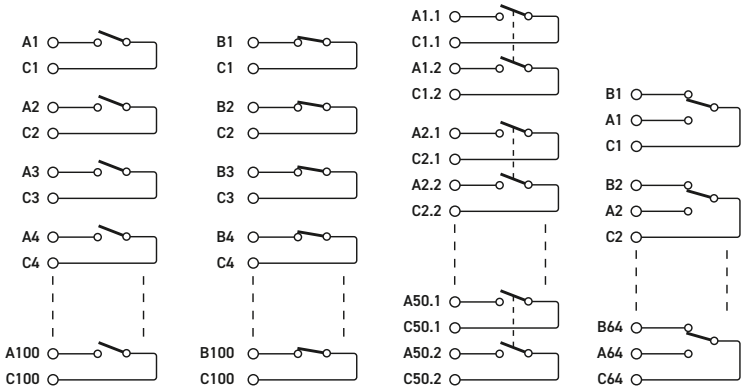

40-145-201 SPST | **40-145-201-NC SPST** | **40-146-202 DPST** | **40-148-201 SPDT**

High Density Relay Modules

ISSUE 9.2 APR 2023

Relay Type

The 40-145/146/148 series modules are fitted with electro-mechanical signal relays, palladium-ruthenium, gold covered contacts. The module is of a single circuit board construction and uses leaded relays (not SMT relays) so in field maintenance is greatly simplified. A spare relay is built onto the circuit board to allow easy maintenance with minimum downtime.

Switching Specification

Switch Type:	Electro-mechanical
Contact Type:	Palladium-ruthenium, Gold Covered Bifurcated contact
Max Switching Voltage:	150 VDC/100 VAC*
Max Power:	60 W/62.5 VA
Max Switch Current:	1 A
Max Carry Current:	1 A
Initial On Path Resistance:	<500 mΩ typical
Off Path Resistance:	$>10^9$ Ω
Minimum Voltage:	100 µV
Thermal Offset:	<10 µV
Operate Time:	<3 ms
Expected Life (operations)	
Very low power load:	$>1x10^8$
Low power load (2 W):	$>1.5x10^7$ (0.1 A, 20 VDC)
Med power load (30 W):	$>5x10^6$ (1 A, 30 VDC)
Full power load (60 W):	$>1x10^5$ (1 A, 60 VDC)

* For full voltage rating, signal sources to be switched must be fully isolated from mains supply and safety earth.

RF Specification - In a 50Ω System (40-148)

Bandwidth (-3 dB):	65 MHz	
Crosstalk (typical):	10 kHz:	-85 dB
	100 kHz:	-70 dB
	1 MHz:	-50 dB
	10 MHz	-30 dB
Isolation (typical):	10 kHz	95 dB
	100 kHz:	75 dB
	1 MHz:	55 dB
	10 MHz:	35 dB

Power Requirements

+3.3 V	+5 V	+12 V	-12 V
0	1440 mA (typ 840 mA)	0	0

Mechanical Characteristics

Single slot 3U PXI (CompactPCI card).
Module weight: 200 g (40-145-201).
125 g (40-146-202).
180 g (40-148-201).

3D models for all versions in a variety of popular file formats are available on request.

Connectors

PXI bus via 32-bit P1/J1 backplane connector.
Signals via front panel 200-pin female LFH* connector, for pin outs please refer to the operating manual.

* LFH relates to the obsolete Molex connector series and is retained for continuity, products will be fitted with a form, fit, function Pickering equivalent connector that is intermateable with the original Molex parts.

Operating/Storage Conditions

Operating Conditions

Operating Temperature:	0 °C to +55 °C
Humidity:	Up to 90 % non-condensing
Altitude:	5000 m

Storage and Transport Conditions

Storage Temperature:	-20 °C to +75 °C
Humidity:	Up to 90 % non-condensing
Altitude:	15000 m

PXI & CompactPCI Compliance

The module is compliant with the PXI Specification 2.2. Local Bus, Trigger Bus and Star Trigger are not implemented.

Uses a 33 MHz 32-bit backplane interface.

Safety & CE Compliance

All modules are fully CE compliant and meet applicable EU directives:
Low-voltage safety EN61010-1:2010,
EMC Immunity EN61326-1:2013,
Emissions EN55011:2009+A1:2010.

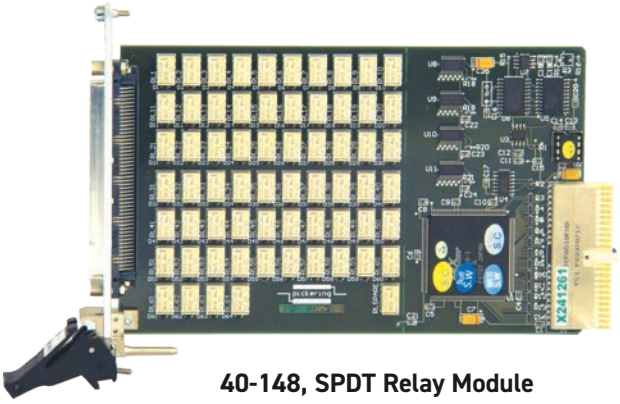

40-148, SPDT Relay Module

Ordering Information

Product Order Codes

50 x SPST, Electro-mechanical Relays	40-145-001
75 x SPST, Electro-mechanical Relays	40-145-101
100 x SPST, Electro-mechanical Relays	40-145-201
50 x SPST, Normally Closed Relays	40-145-001-NC
75 x SPST, Normally Closed Relays	40-145-101-NC
100 x DPST, Normally Closed Relays	40-145-201-NC
25 x DPST, Electro-mechanical Relays	40-146-002
50 x DPST, Electro-mechanical Relays	40-146-202
32 x SPDT, Electro-mechanical Relays	40-148-001
48 x SPDT, Electro-mechanical Relays	40-148-101
64 x SPDT, Electro-mechanical Relays	40-148-201

Product Customization

Pickering modules are designed and manufactured on our own flexible manufacturing lines, giving complete product control and enabling simple customization to meet very specific requirements.

Customization can include:

- Alternative relay types
- Mixture of relay types
- Alternative number of relays
- Different performance specifications

All customized products are given a unique part number, fully documented and may be ordered at any time in the future. Please contact your local sales office to discuss.

Support Products

eBIRST Switching System Test Tool

This product is supported by the *eBIRST* test tools which simplify the identification of failed relays, the required *eBIRST* tools are below. For more information go to: pickeringtest.com/ebirst

Product	Test Tool	Adapter
All Types	93-002-001	Not Required

Spare Relay Kits

Kits of replacement relays are available for the majority of Pickering's PXI switching products, simplifying servicing and reducing down-time.

Product	Relay Kit
All Types	91-100-001

For further assistance, please contact your local Pickering sales office.

Mating Connectors & Cabling

For connection accessories for the 40-145 series please refer to the 90-002D 200-pin LFH Connector Accessories data sheet where a complete list and documentation can be found for accessories, or refer to the Connection Solutions catalog.

Pickering can supply mating 200-pin connectors and cable assemblies to enable easy integration of the 40-145/146/148 series of relay modules

Chassis Compatibility

This PXI module must be used in a suitable chassis. It is compatible with the following chassis types:

- All chassis conforming to the 3U PXI and 3U Compact PCI (cPCI) specification
- Legacy and Hybrid Peripheral slots in a 3U PXI Express (PXIe) chassis
- Pickering Interfaces LXI or LXI/USB Modular Chassis

Chassis Selection Guide

Standard PXI or hybrid PXIe Chassis from any Vendor:

- Mix our 1000+ PXI switching & simulation modules with any vendor's PXI instrumentation
- Embedded or remote Windows PC control
- Real-time Operating System Support
- High data bandwidths, especially with PXI Express
- Integrated module timing and synchronization

Pickering LXI or LXI/USB Modular Chassis—only accept our 1000+ PXI Switching & Simulation Modules:

- Ethernet or USB control enables remote operation
- Low-cost control from practically any controller
- LXI provides manual control via Web browsers
- Driverless software support
- Power sequencing immunity
- Ethernet provides chassis/controller voltage isolation
- Independence from Windows operating system

Connectivity Solutions

We provide a full range of supporting cable and connector solutions for all our switching products—20 connector families with 1200+ products. We offer everything from simple mating connectors to complex cables assemblies and terminal blocks. All assemblies are manufactured by Pickering and are guaranteed to mechanically and electrically mate to our modules.

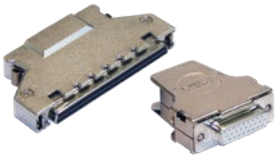

Connectors & Backshells

Multiway Cable Assemblies

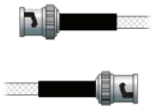

RF Cable Assemblies

Connector Blocks

We also offer customized cabling and have a free online **Cable Design Tool** that can be used to create custom cable solutions for many applications. Visit: pickeringtest.com/cdt to start your design.

Mass Interconnect

We recommend the use of a mass interconnect solution when an Interchangeable Test Adapter (ITA) is required for a PXI or LXI based test system. Our modules are fully supported by both Virginia Panel and MacPanel.

Pickering Reed Relays

We are the only switch provider with in-house reed relay manufacturing capability via our Relay Division. These instrument grade reed relays feature ***SoftCenter™*** technology, ensuring long service life and repeatable contact performance. To learn more, please go to: pickeringrelay.com

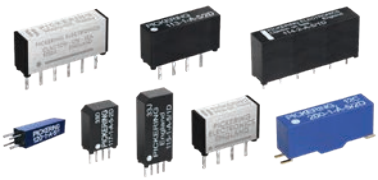

Programming

Pickering provide kernel, IVI and VISA (NI & Keysight) drivers which are compatible with all Microsoft supported versions of Windows and popular older versions. For a list of all supporting operating systems, please see: pickeringtest.com/os

The VISA driver support is provided for LabVIEW Real Time Operating Systems (Pharlap and Linux-RT). For other RTOS support contact Pickering. These drivers may be used with a variety of programming environments and applications including:

- **Pickering Interfaces Switch Path Manager**
- **National Instruments** products (LabVIEW, LabWindows/CVI, Switch Executive, MAX, TestStand, VeriStand, etc.)
- **Microsoft Visual Studio** products (Visual Basic, Visual C++)
- **Programming Languages** C, C++, C#, Python
- **Keysight** VEE and OpenTAP
- **Mathworks** Matlab
- **Marvin** ATEasy
- **MTQ Testsolutions** Tecap Test & Measurement Suite

Drivers for popular Linux distributions are available, other environments are also supported, please contact Pickering with specific enquiries. We provide Soft Front Panels (SFPs) for our products for familiarity and manual control, as well as comprehensive documentation and example programs to help you develop test routines with ease.
To learn more about software drivers and development environments, please go to: pickeringtest.com/software

Signal Routing Software

Our signal routing software, Switch Path Manager, automatically selects and energizes switch paths through Pickering switching systems. Signal routing is performed by simply defining test system endpoints to be connected together, greatly accelerating Test System software development. To learn more, please go to: pickeringtest.com/spm

Diagnostic Relay Test Tools

eBIRST Switching System Test Tools are designed specifically for our PXI, PCI or LXI products, these tools simplify switching system fault-finding by quickly testing the system and graphically identifying the faulty relay.
To learn more, please go to: pickeringtest.com/ebirst

Three Year Warranty & Guaranteed Long-Term Support

All standard products manufactured by Pickering Interfaces are warranted against defective materials and workmanship for a period of three years from the date of delivery to the original purchaser. Extended warranty and service agreements are available for all our modules and systems with various levels to suit your requirements. Although we offer a 3-year warranty as standard, we also include guaranteed long-term support—with a history of supporting our products for typically 15-20 years. To learn more, please go to: pickeringtest.com/support

Available Product Resources

We have a large library of product resources including success stories, product and support videos, articles and white papers as well as application specific product brochures to assist when looking for the switching, simulation and connection solutions you need. We also have handy reference books on Switching Technology and for the PXI and LXI standards.

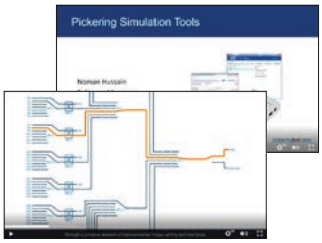

To view, download or request any of our product resources, please visit: pickeringtest.com/resources