40-411 User Manual

PXI Relay Driver Module



PXI

Issue 3.2 January 2020

pickeringtest.com

© COPYRIGHT (2020) PICKERING INTERFACES. ALL RIGHTS RESERVED.

No part of this publication may be reproduced, transmitted, transcribed, translated or stored in any form, or by any means without the written permission of Pickering Interfaces.

Technical details contained within this publication are subject to change without notice.

ISO 9001
Reg No. FM38792

TECHNICAL SUPPORT

For Technical Support please contact Pickering Interfaces either by phone, the website or via e-mail.

WARRANTY

All products manufactured by Pickering Interfaces are warranted against defective materials and workmanship for a period of three years, excluding programmable power supplies, from the date of delivery to the original purchaser. Any product found to be defective within this period will, at the discretion of Pickering Interfaces be repaired or replaced.

Products serviced and repaired outside of the warranty period are warranted for ninety days.

Extended warranty and service are available. Please contact Pickering Interfaces by phone, the website or via e-mail.

ENVIRONMENTAL POLICY

Pickering Interfaces operates under an environmental management system similar to ISO 14001.

Pickering Interfaces strives to fulfil all relevant environmental laws and regulations and reduce wastes and releases to the environment. Pickering Interfaces aims to design and operate products in a way that protects the environment and the health and safety of its employees, customers and the public. Pickering Interfaces endeavours to develop and manufacture products that can be produced, distributed, used and recycled, or disposed of, in a safe and environmentally friendly manner.

Worldwide Technical Support and Product Information

pickeringtest.com

Pickering Interfaces Headquarters

Stephenson Road Clacton-on-Sea CO15 4NL United Kingdom
Tel: +44 (0)1255-687900
E-Mail: sales@pickeringtest.com

USA
Tel: (West) +1 541 471 0700
Tel: (East) +1 781 897 1710
E-mail: ussales@pickeringtest.com

France
Tel +33 9 72 58 77 00
E-mail frsales@pickeringtest.com

Germany
Tel: +49 89 125 953 160
E-mail: desales@pickeringtest.com

Sweden
Tel: +46 340-69 06 69
E-mail: ndsales@pickeringtest.com

Czech Republic
Tel: +420 558 987 613
E-mail: desales@pickeringtest.com

China
Tel: +86 4008 799 765
E-mail: chinasales@pickeringtest.com

PRODUCT SAFETY

SAFETY SYMBOLS

The following safety symbols may be used on the product and throughout the product documentation.

MEANING / DESCRIPTION	SYMBOL
PROTECTIVE EARTH (GROUND) To identify any terminal which is intended for connection to an external conductor for protection against electric shock in case of a fault, or the terminal of a protective earth (ground) electrode.	
DANGEROUS VOLTAGE To indicate hazards arising from dangerous voltages.	
WARNING / CAUTION An appropriate safety instruction should be followed or caution to a potential hazard exists. Refer to the relevant instructions detailed within the product manual.	
HEAVY If this product is heavy reference should be made to the safety instructions for provisions of lifting and moving.	
STATIC SENSITIVE To indicate that static sensitive devices are present and handling precautions should be followed.	

CONTENTS

Copyright Statement II

Technical Support and Warranty III

Product Safety IV

Contents (this page) V

Warnings and Cautions VII

Section 1
Technical Specification 1.1

Section 2
Technical Description 2.1
- Functional Description 2.1
- Guidance on Using the Module 2.2

Section 3
Installation 3.1
- Pre Operation Checks 3.1
- Hardware Installation 3.1
- Software Installation 3.2
- Testing Operation 3.3

Section 4
Programming Guide 4.1
- Programming Options For Pickering PXI Modules 4.1
- Module Architecture 4.2
- Programming The Module 4.3

Section 5
Connector Information 5.1

Section 6
Trouble Shooting 6.1

Section 7
Maintenance Information 7.1
- Relay Lookup Tables 7.1

THIS PAGE INTENTIONALLY BLANK

WARNINGS AND CAUTIONS

WARNING - HAZARDOUS ENVIRONMENTS	SYMBOL
This product is not specifically designed for use in hazardous environments, for example in explosive atmospheres. If the product is to be used in hazardous environments we recommend that the user ensures suitable protective measures are taken.	

WARNING - DANGER OF ELECTRIC SHOCK	SYMBOL
This module may contain hazardous voltages. Before removing the module from the rack remove all supplies and disconnect user I/O signals. Unused slots in the host chassis are populated with blanking plates to prevent access to user I/O signals that may be present. Blanking panels are available to order from Pickering in a variety of slot widths. If the product is not used in this manner for example by using an extender card then additional care must be taken to avoid contact with exposed signals. Not to be used in safety critical circuits, refer to the Pickering Interfaces' terms & conditions of sale. This module must not be used for the switching of Mains Circuits. For the switching of voltages up to the module's full specification, Secondary Circuit power supplies and the Device Under Test must be fully isolated from the Mains Circuit and the safety earth. The host chassis must be correctly installed and be connected to mains or factory safety ground, please refer to your chassis installation manual. 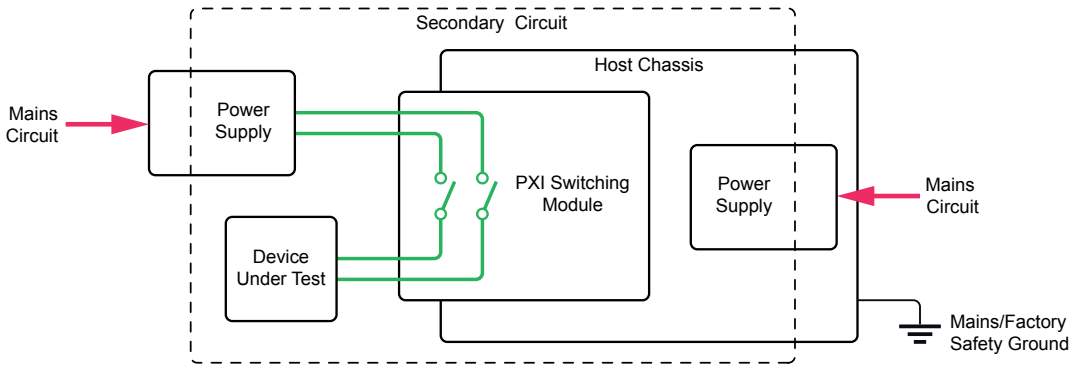 **Diagram Showing Separation Between The Mains Circuit and Secondary Circuit / DUT** For the purposes of this document, a Mains Circuit is an installation classified as Overvoltage Category II up to 300V. Separation between the Secondary Circuit and Mains Circuit is achieved by a transformer in which the primary windings are separated from the secondary windings by reinforced insulation, double insulation, or a screen connected to the protective conductor terminal.	

CAUTION - HANDLING OF ELECTROSTATIC-SENSITIVE DEVICES	SYMBOL
Certain semiconductor devices used in this equipment are liable to damage due to static voltage. Observe the following precautions when handling these devices in their unterminated state, or sub-assemblies containing these devices: 1. Persons removing sub-assemblies from equipment using these devices must be earthed by a wrist strap and a resistor at the point provided on the equipment. 2. Soldering irons used during the repair operations must be low voltage types with earthed tips and isolated from the mains voltage by a double insulated transformer. 3. Outer clothing worn must be unable to generate static charges. 4. Printed Circuit Boards (PCBs) fitted with these devices must be stored and transported in anti-static bags.	

CAUTION - PRODUCT DOCUMENTATION	SYMBOL
Suitably qualified & trained users should ensure that the accompanying documentation is fully read and understood before attempting to install or operate the product.	

SAFETY INSTRUCTIONS

SAFETY INSTRUCTIONS
All cleaning and servicing requires the equipment to be isolated and disconnected from the power source and user I/O signals (refer to the Maintenance Section). • Appropriate manual handling procedures should be followed as dictated by the weight of the individual module or the combined weight of the modules & chassis. • Should a fault occur with the module or chassis, immediately isolate and disconnect the incoming power to the chassis and the user I/O signals. • Ensure the equipment is installed, operated and maintained by trained and authorised personnel. • For suitably equipped products in the event of an emergency press the red “emergency stop” button situated on the front of the unit.

SECTION 1 - TECHNICAL SPECIFICATION

- 64-Channel Relay Driver
- 60V Drive Capability, Up to 1A Per Channel
- Short Circuit and Thermal Protection
- Over Voltage Clamp
- High Current Capacity
- Switch With External or Internal Relay Power
- VISA, IVI & Kernel Drivers Supplied for Windows
- Supported by PXI or LXI Chassis
- 3 Year Warranty



The 40-411 is the perfect solution for driving external relays from a PXI system or from Pickering Interfaces LXI modular chassis.

The module provides 64 channels of low side current drive for external relays. To use the module, simply connect a positive voltage source to one side of the relay coil and the other side to the 40-411 output. Each output is capable of sinking up to 1 Amp of continuous current.

Outputs are over-current, over-voltage and thermally protected. The thermal and current limit circuits protect the output from failure even when directly connected to voltages up to 36V. When driving relays, inductive spikes are clamped at 80V allowing energy of up to 550m Joule to be absorbed without the use of additional diode clamps.

Relay coil current is prevented from flowing back into the chassis backplane by the use of an isolation barrier.

Power for the relays can be supplied by the module for low power relay applications.

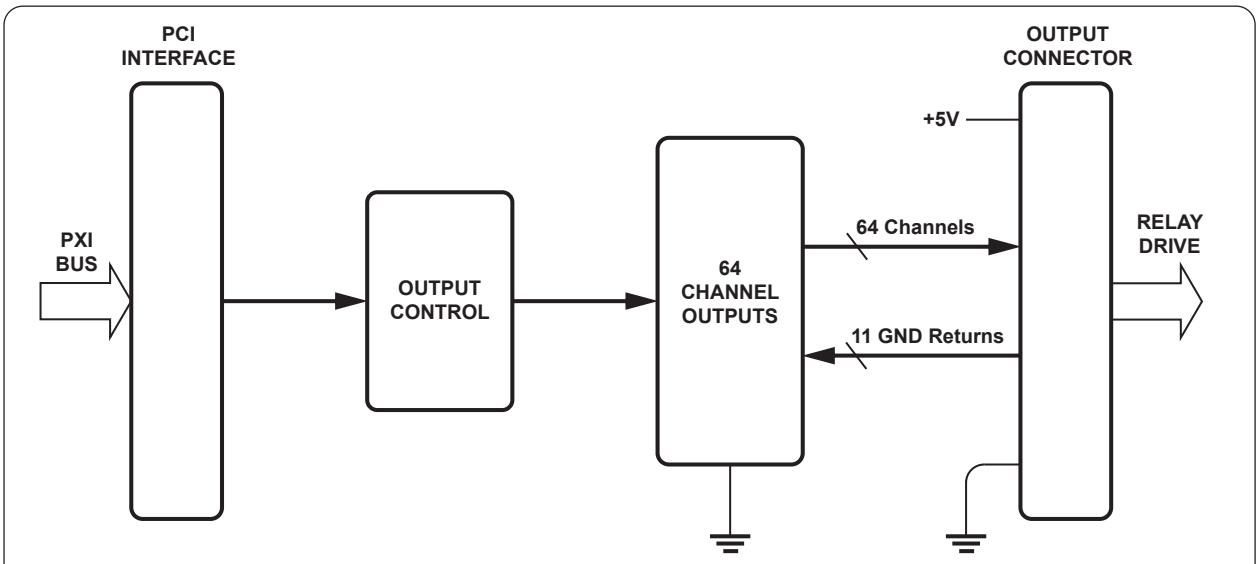

40-411 Relay Driver Functional Diagram

Specification

Number of Output Channels:	64
Typical Output Resistance:	0.6Ω (on state)
Off State Leakage Current:	3µA maximum at 12V (start up condition is open circuit).
Maximum Output Current:	1A on any channel, 25A module total.
Maximum Output Voltage:	60V* (recommended maximum continuous voltage).
Output Protection:	Limits at 1.3A nominal Thermal limit activates at typically 1.5W in output device. Overvoltage clamp operates at 80V.
Internal Relay Voltage Source:	Three outputs each +5V at 2A. Overall maximum 6A, Polyfuse protected. 11 ground pins provided.

* For full voltage rating, signal sources must be fully isolated from mains supply and safety earth.

Power Requirements

+3.3V	+5V	+12V	-12V
0.12A	0.05A	0.15A	0

Mechanical Characteristics

Single slot 3U PXI (CompactPCI card).
3D models for all versions in a variety of popular file formats are available on request.

Connectors

PXI bus via 32-bit P1/J1 backplane connector.
Signals via front panel 78-pin male D-Type connector, for pin outs please refer to the operating manual.

Operating/Storage Conditions

Operating Conditions

Operating Temperature:	0°C to +55°C
Humidity:	Up to 90% non-condensing
Altitude:	5000m

Storage and Transport Conditions

Storage Temperature:	-20°C to +75°C
Humidity:	Up to 90% non-condensing
Altitude:	15000m

PXI & CompactPCI Compliance

The module is compliant with the PXI Specification 2.2. Local Bus, Trigger Bus and Star Trigger are not implemented.

Uses a 33MHz 32-bit backplane interface.

Safety & CE Compliance

All modules are fully CE compliant and meet applicable EU directives: Low-voltage safety EN61010-1:2010, EMC Immunity EN61326-1:2013, Emissions EN55011:2009+A1:2010.

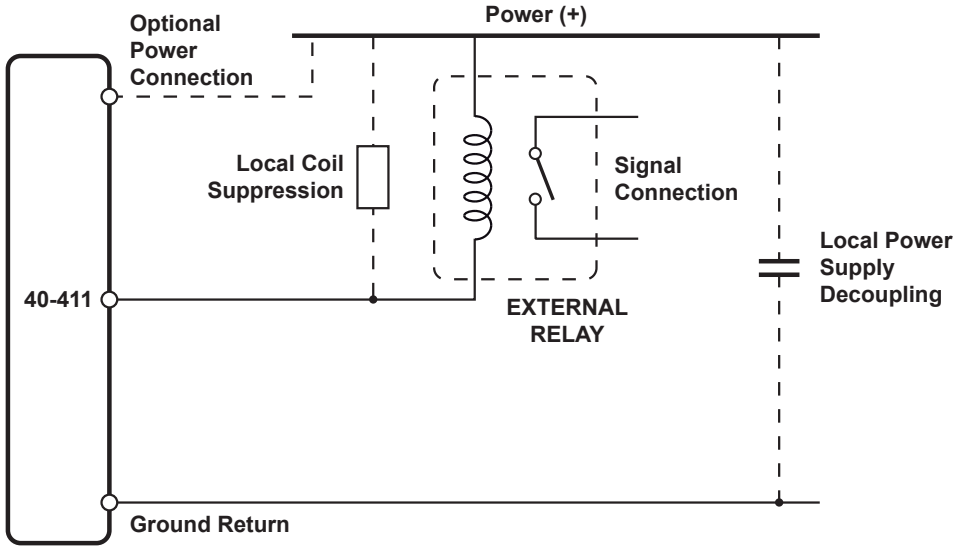

Using the 40-411 to drive an external relay.Local power supply decoupling for the relay and coil suppression circuits are reccommended for best EMC characteristics with high current relays, but are not essential for safe operation due to the built in protection system.

Product Order Codes

64-Channel Relay Driver Module	40-411-001

Product Customization

Pickering PXI modules are designed and manufactured on our own flexible manufacturing lines, giving complete product control and enabling simple customization to meet very specific requirements.

All customized products are given a unique part number, fully documented and may be ordered at any time in the future. Please contact your local sales office to discuss.

Mating Connectors & Cabling

For connection accessories for the 40-411 series please refer to the 90-006D 78-pin D-Type Connector Accessories data sheet where a complete list and documentation can be found for accessories, or refer to the Connection Solutions catalog.

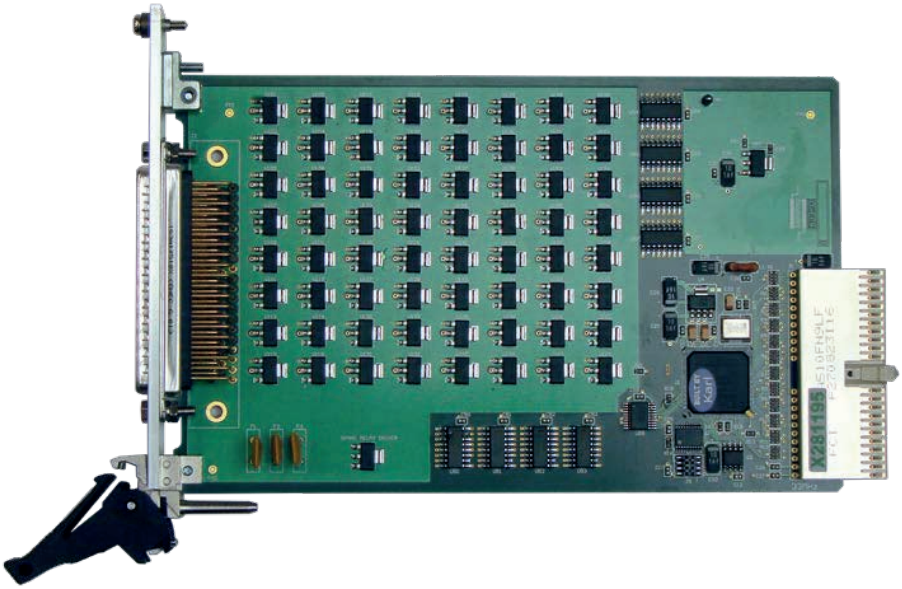

Chassis Compatibility

This PXI module must be used in a suitable chassis. It is compatible with the following chassis types:

- All chassis conforming to the 3U PXI and 3U Compact PCI (cPCI) specification
- Legacy and Hybrid Peripheral slots in a 3U PXI Express (PXIe) chassis
- Pickering Interfaces LXI or LXI/USB Modular Chassis



Chassis Selection Guide

Standard PXI or hybrid PXIe Chassis from any Vendor:

- Mix our 1000+ PXI switching & simulation modules with any vendor's PXI instrumentation
- Embedded or remote Windows PC control
- Real-time Operating System Support
- High data bandwidths, especially with PXI Express
- Integrated module timing and synchronization

Pickering LXI or LXI/USB Modular Chassis—only accept our 1000+ PXI Switching & Simulation Modules:

- Ethernet or USB control enables remote operation
- Low-cost control from practically any controller
- LXI provides manual control via Web browsers
- Driverless software support
- Power sequencing immunity
- Ethernet provides chassis/controller voltage isolation
- Independence from Windows operating system



Connectivity Solutions

We provide a full range of supporting cable and connector solutions for all our switching products—20 connector families with 1200+ products. We offer everything from simple mating connectors to complex cables assemblies and terminal blocks. All assemblies are manufactured by Pickering and are guaranteed to mechanically and electrically mate to our modules.

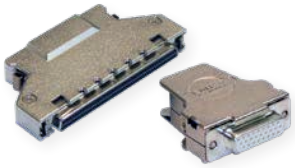

Connectors & Backshells



Multiway Cable Assemblies

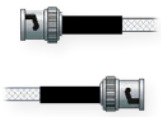

RF Cable Assemblies

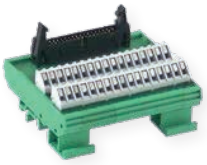

Connector Blocks

We also offer customized cabling and have a free online **Cable Design Tool** that can be used to create custom cable solutions for many applications.
Visit: pickeringtest.com/cdt to start your design.



Mass Interconnect

We recommend the use of a mass interconnect solution when an Interchangeable Test Adapter (ITA) is required for a PXI or LXI based test system. Our modules are fully supported by both Virginia Panel and MacPanel.

Pickering Reed Relays

We are the only switch provider with in-house reed relay manufacturing capability via our sister company, Pickering Electronics. These instrument grade reed relays feature ***SoftCenter***® technology, ensuring long service life and repeatable contact performance.

To learn more, please go to: pickeringrelay.com



Programming

Pickering provide kernel, IVI and VISA (NI & Keysight) drivers which are compatible with all Microsoft supported versions of Windows and popular older versions. For a list of all supporting operating systems, please see: pickeringtest.com/os

The VISA driver is also compatible with Real-Time Operating Systems such as LabVIEW RT. For other RTOS support contact Pickering. These drivers may be used with a variety of programming environments and applications including:

- **Pickering Interfaces Switch Path Manager**
- **National Instruments** products (LabVIEW, LabWindows/CVI, Switch Executive, MAX, TestStand, VeriStand, etc.)
- **Microsoft Visual Studio** products (Visual Basic, Visual C+)
- **Keysight** VEE and OpenTAP
- **Mathworks** Matlab
- **Marvin** ATEasy
- **MTQ Testsolutions** Tecap Test & Measurement Suite

Drivers for popular Linux distributions are available, other environments are also supported, please contact Pickering with specific enquiries. We provide Soft Front Panels (SFPs) for our products for familiarity and manual control, as well as comprehensive documentation and example programs to help you develop test routines with ease.
To learn more about software drivers and development environments, please go to: pickeringtest.com/software

Signal Routing Software



Our signal routing software, Switch Path Manager, automatically selects and energizes switch paths through Pickering switching systems. Signal routing is performed by simply defining test system endpoints to be connected together, greatly accelerating Test System software development. To learn more, please go to: pickeringtest.com/spm

Diagnostic Relay Test Tools



eBIRST Switching System Test Tools are designed specifically for our PXI, PCI or LXI products, these tools simplify switching system fault-finding by quickly testing the system and graphically identifying the faulty relay.
To learn more, please go to: pickeringtest.com/ebirst

Three Year Warranty & Guaranteed Long-Term Support

All standard products manufactured by Pickering Interfaces are warranted against defective materials and workmanship for a period of three years from the date of delivery to the original purchaser. Extended warranty and service agreements are available for all our modules and systems with various levels to suit your requirements. Although we offer a 3-year warranty as standard, we also include guaranteed long-term support—with a history of supporting our products for typically 15-20 years. To learn more, please go to: pickeringtest.com/support

Available Product Resources

We have a large library of product resources including success stories, product and support videos, articles, as well as complete product catalogs and product reference maps to assist when looking for the switching, simulation and cable and connector solutions you need. We have also published handy reference books on Switching Technology and for the PXI and LXI standards.



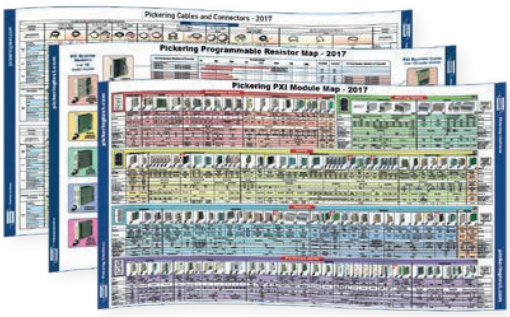



To view, download or request any of our product resources, please visit: pickeringtest.com/resources

THIS PAGE INTENTIONALLY BLANK

SECTION 2 - TECHNICAL DESCRIPTION

FUNCTIONAL DESCRIPTION

A functional block diagram is provided in Figure 2.1. The Module is powered by the +5V and +3.3V supplies from the PXI backplane via Compact PCI connector J1. The interface to the user test equipment is via the front panel mounted 78-pin D-type connector, J2. The module comprises Solid State Switches U101 to U164, Shift Registers U50 to U57, Level Translator U59, configuration EEPROMS U2 and U3, and PCI Bridge U1. The module configuration, is stored in EEPROM U7. U50 to U57 are loaded with serial data from PCI bridge U1 via U59. The bit pattern that appears on the outputs of the shift registers is used to activate the required solid state switches, U101 to U164. When activated, the solid state switches sink current enabling the user to drive external relays via conector U2. The PCI Bridge U1 is configured by EEPROM U2.

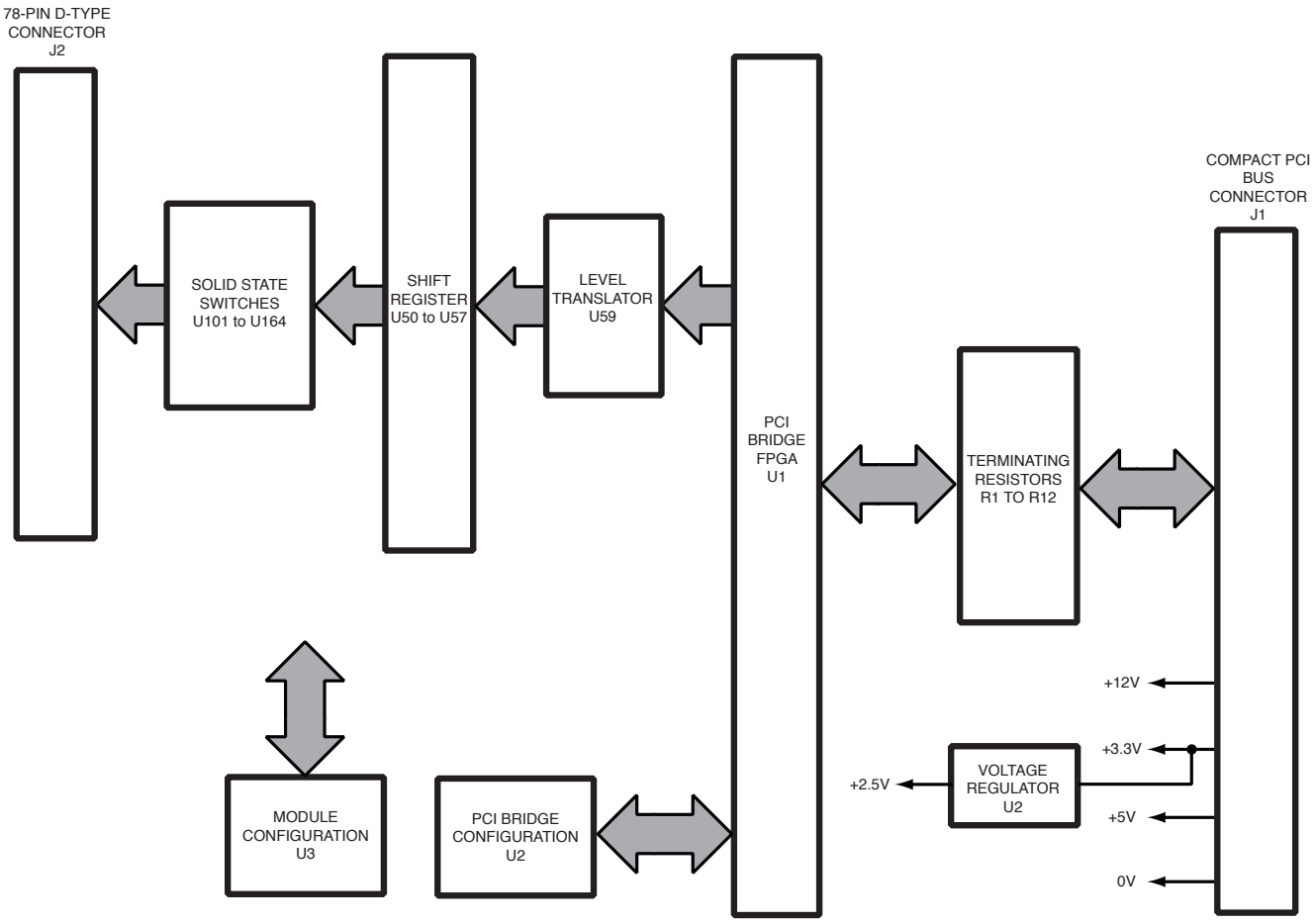

Figure 2.1 - Relay Driver Module 40-411: Functional Block Diagram

GUIDANCE ON USING THE MODULE

A typical application for the 40-411 is shown in Figure 2.2. where a single external relay is driven from one of the 64 outputs. Local power supply decoupling for the relay and coil suppression circuits are recommended for best EMC characteristics with high current relays, but are not essential for safe operation due to the built in protection system.

External Relay Power Supply

The front panel connector has 3 pins that can be used to supply +5V for powering external relays. Each pin is protected by a resettable Poly Fuse that can continuously pass 2A, allowing a maximum of 6A to be delivered per module. A tripped Poly Fuse is reset by removing the power from the module.

The Poly Fuses are slow reacting devices each being capable of continuously supplying 2A, but are present to protect against fault conditions only and should not be relied upon to limit the overall current usage to 6A.

When using the internal +5V supply to drive external relays, due consideration must be given to the current distribution in the host PXI rack as typical power supply allocation is 2A per slot.

Ground Return Pins

When powering relays with an external supply, the return path is provided by a total of 11 ground pins on the module's front panel connector. Multiple pins should be utilized to distribute the current loading. Pickering's mating connectors are rated at 3A per pin, consult manufacturer's specifications if alternatives are used.

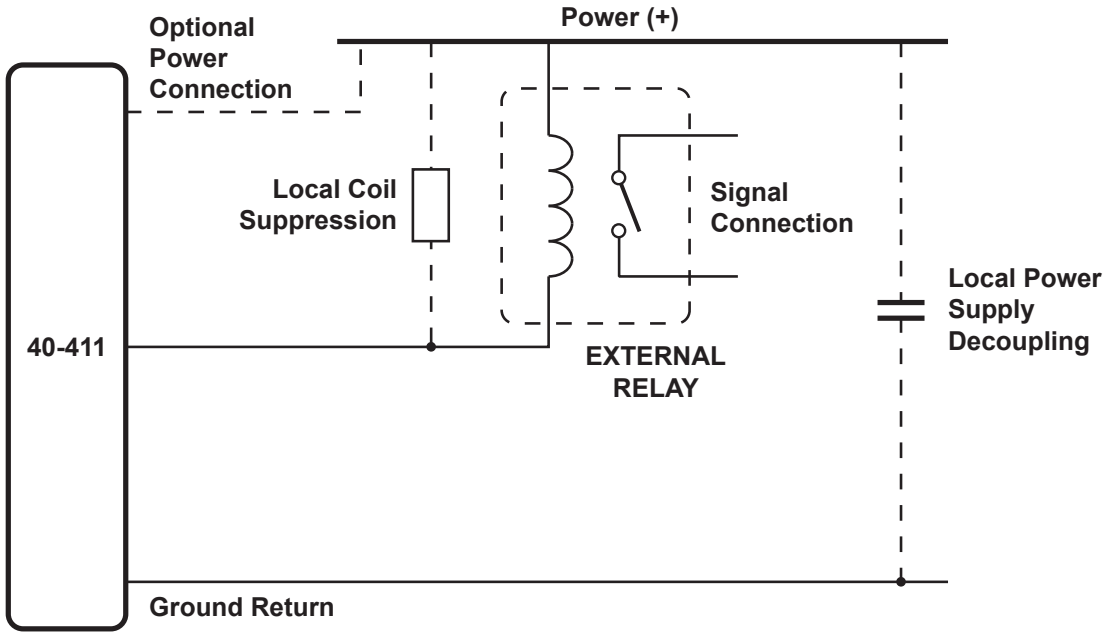

Figure 2.2 - Relay Driver Module 40-411: Typical Application

SECTION 3 - INSTALLATION

Refer to the Warnings and Cautions at the front of this manual

Modular products require installation in a suitable PXI/LXI chassis. The module is designed for indoor use only.

PREOPERATION CHECKS (UNPACKING)

1. Check the module for transport damage and report any damage immediately to Pickering Interfaces. Do not attempt to install the product if any damage is evident.
2. Position the chassis relative to any other equipment the module(s) will connect with. Ensure the chassis is not connected to the electrical supply.
3. Ensure that the designated area for the chassis containing the module is of flat and solid construction to withstand and support the combined weight of the module(s) and chassis.

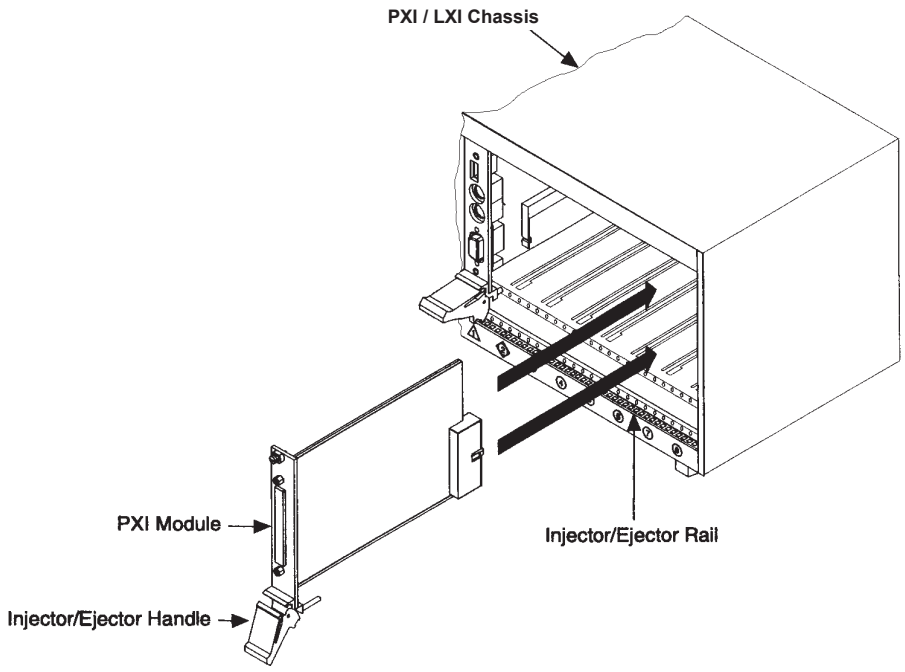

Figure 3.1 - Installing the Module into a PXI/cPCI/LXI Chassis

HARDWARE INSTALLATION
ELECTRICAL CONNECTION (CHASSIS)

1. The chassis must be electrically installed in accordance with local regional electrical codes by a qualified engineer.
2. The chassis must be grounded.

Electrostatic discharge can damage the components on the module. To avoid such damage in handling the board refer to page VII.

Ensure that there is adequate ventilation.

The module should be installed in accordance with the following procedure:

1. Ensure that the system is turned OFF but still connected to mains so that it remains grounded.
2. Choose an appropriate slot in the rack.
3. Remove the blanking plate for the chosen slot.
4. Ensure that the injector/ejector handle is in its downward position. Align the module with the card guides on the top and bottom of the slot.

   Do not raise the injector/ejector handle whilst inserting the module as the module will not insert properly.
5. Hold the handle whilst slowly sliding the module into the card guides until the handle catches on the injector/ejector rail (refer to Figure 3.1).
6. Raise the injector/ejector handle until the module firmly seats into the backplane. The front panel of the module should be flush with the front panel of the chassis.
7. Secure the front panel of the module using both screws to the chassis front panel mounting rails.
8. In a system employing a remote control interface to connect an external controller to a PXI chassis or to link multiple chassis, power-up the system as follows:
   a. For a system comprising an external controller and one chassis, power up the chassis before powering up the external controller.
   b. For a system comprising more than one chassis, turn ON the last chassis in the system followed by the penultimate, etc, and finally turn ON the external controller or chassis containing the system controller.
9. For Pickering Interfaces modular LXI installation there is no requirement to use any particular power up sequence.

SOFTWARE INSTALLATION

First install the appropriate Pickering PXI switch card drivers by running the installer program Setup.exe (provided in a compressed zip file), either from the CD-ROM supplied, or by downloading the latest version from our website **pickeringtest.com** - the recommended method. Setup is accompanied by a ReadMe file containing additional installation information. A single installation covers all cards in the System 40, System 45 and System 50 ranges.

When installation completes, the installed drivers' ReadMe file is offered for display. It can also be displayed later using a shortcut on the Programs>>Pickering menu.

If you are not a LabVIEW user you should choose the "full" version, and once that has been installed run the LabVIEW Runtime Engine installer via the shortcut on the Programs>>Pickering menu. In the absence of LabVIEW the Runtime Engine is required to support the Pickering Test Panels application.

TESTING OPERATION

After installation of the hardware and Pickering PXI Driver software package start the General Soft Front Panel (GSFP) using the desktop icon or via the Start menu (***Start Menu-> Pickering Interfaces Ltd -> General Soft Front Panel***).



Figure 3.2 - General Soft Front Panel Icon

A selector panel will appear, listing all installed Pickering PCI, PXI or LXI switch cards and resistor cards. Click on the card you wish to control, and a graphical control panel is presented allowing operation of the card. Panels can be opened simultaneously for all the installed cards.

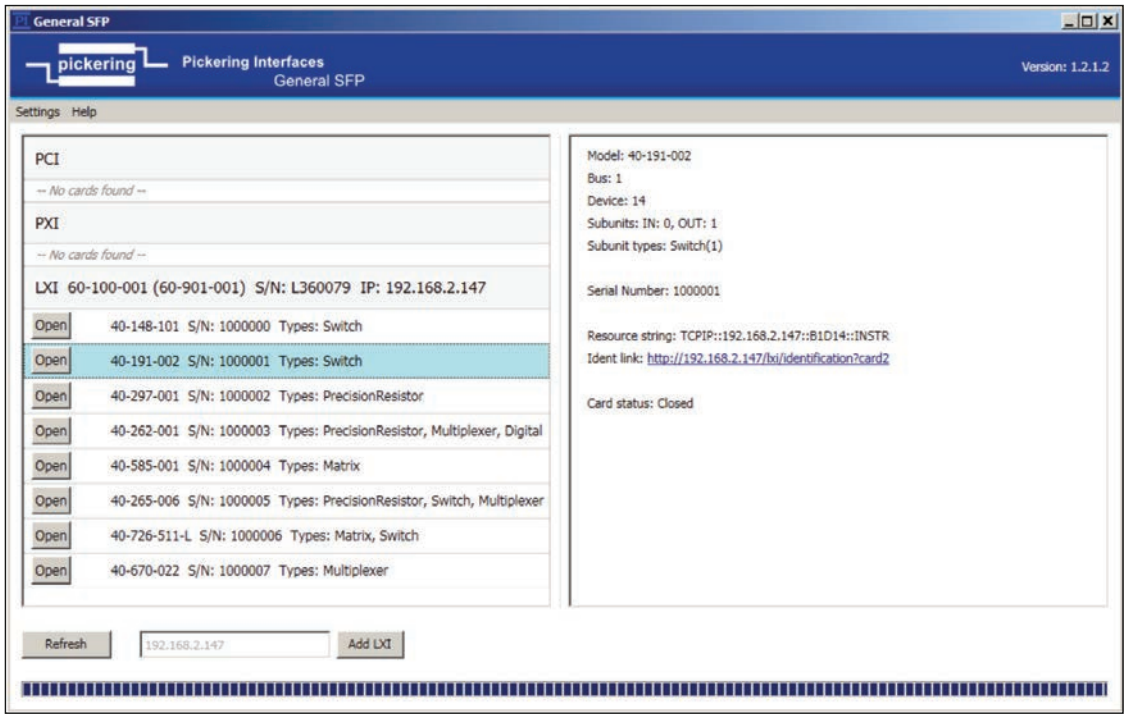

Figure 3.3 - General Soft Front Panel Selector

More details how to use the GSFP can be found in the manual, via menu ***Help\Manual***

THIS PAGE INTENTIONALLY BLANK

SECTION 4 - PROGRAMMING GUIDE

PROGRAMMING OPTIONS FOR PICKERING INTERFACES PXI MODULES

For information on the installation and use of drivers and the programming of Pickering's products in various software environments, please refer to the Software User Manual.

This is available as a download from:
https://www.pickeringtest.com/support/software-drivers-and-downloads

Also, it can be accessed from the DVD supplied with the product:
<DVD_DRIVE>\downloads\Documentation\Software-Manual.pdf

MODULE ARCHITECTURE

40-411-001 Digital Output Sub Units

This section describes the 40-411-001 sub units and the relevant Pickering VISA Driver and Direct Driver functions used to program them.

	Applicable Functions	
	VISA Driver	**Direct Driver**
Output Sub-Units	**pipx40_setChannelState** pipx40_getChannelState **pipx40_setChannelPattern** pipx40_getChannelPattern **pipx40_clearSub** pipx40_setMaskState pipx40_getMaskState pipx40_setMaskPattern pipx40_getMaskPattern pipx40_clearMask	**PIL_OpBit** PIL_ViewBit **PIL_WriteSub** PIL_ViewSub **PIL_ClearSub** PIL_MaskBit PIL_ViewMaskBit PIL_WriteMask PIL_ViewMask PIL_ClearMask
1: DIGITAL(64)	Controls output driver states, each bit: 0 = INACTIVE 1 = ACTIVE	

Note: The highlighted functions above are of special interest.

PROGRAMMING THE MODULE

Using the Direct driver or VISA driver to control the 40-411-001

This section provides some code fragments which show how to control the 40-411-001 using either the Direct Driver or the VISA Driver.

Once the drivers are installed the manual “Sys40Prg.pdf” and driver help files which fully describes these functions can be found in the Pickering folder(s) or the Pickering entries on your Start Menu.

The card must be opened before use and closed after using the following function calls:

Direct Driver - Open with `PIL_OpenCards` or `PIL_OpenSpecifiedCard` and close with `PIL_CloseCards` or `PIL_CloseSpecifiedCards` respectively.

VISA Driver - Open with `pipx40_init`, and close with, `pipx40_close`.

Setting the relay driver output states

Using the Pickering Direct driver:

```
DWORD SubUnit = 1;
PIL_ClearSub(CardNo, SubUnit);     //clear all driver channels to inactive
PIL_OpBit(CardNo, SubUnit, 5, 1); //set channel 5 to active
PIL_OpBit(CardNo, SubUnit, 5, 0); //set channel 5 to inactive
DWORD MultiChan[2];
MultiChan[0] = 1;                  //set channels 1 and 33 active
MultiChan[1] = 1;                  //and all others inactive
PIL_WriteSub(CardNo, SubUnit, MultiChan);
```

Using the VISA driver:

```
ViUInt32 SubUnit = 1;
pipx40_clearSub(vi, SubUnit);      //clear all driver channels to inactive
pipx40_setChannelState (vi, SubUnit, 5, 1); //set channel 5 to active
pipx40_setChannelState (vi, SubUnit, 5, 0); //set channel 5 to active
ViUInt32 MultiChan[2];
MultiChan[0] = 1;                  //set channels 1 and 33 active
MultiChan[1] = 1;                  //and all others inactive
pipx40_setChannelPattern(vi, SubUnit, MultiChan);
```

THIS PAGE INTENTIONALLY BLANK

SECTION 5 - CONNECTOR INFORMATION

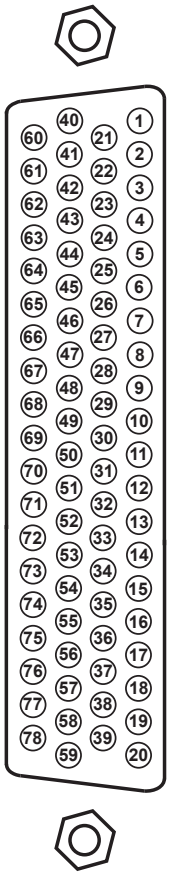

Figure 5.1 - Pin Outs: Relay Driver Module 40-411 (78-pin Male D-Type)

78-pin D-Type Plug							
Pin No.	Signal	Pin No.	Signal	Pin No.	Signal	Pin No.	Signal
1	RL49	21	RL33	40	RL17	60	RL1
2	RL50	22	RL34	41	RL18	61	RL2
3	RL51	23	RL35	42	RL19	62	RL3
4	RL52	24	RL36	43	RL20	63	RL4
5	RL53	25	RL37	44	RL21	64	RL5
6	RL54	26	RL38	45	RL22	65	RL6
7	RL55	27	RL39	46	RL23	66	RL7
8	RL56	28	RL40	47	RL24	67	RL8
9	GND	29	GND	48	GND	68	GND
10	RL57	30	RL41	49	RL25	69	RL9
11	RL58	31	RL42	50	RL26	70	RL10
12	RL59	32	RL43	51	RL27	71	RL11
13	RL60	33	RL44	52	RL28	72	RL12
14	RL61	34	RL45	53	RL29	73	RL13
15	RL62	35	RL46	54	RL30	74	RL14
16	RL63	36	RL47	55	RL31	75	RL15
17	RL64	37	RL48	56	RL32	76	RL16
18	GND	38	GND	57	GND	77	GND
19	GND	39	5V	58	GND	78	5V
20	GND			59	5V		

THIS PAGE INTENTIONALLY BLANK

SECTION 6 - TROUBLE SHOOTING

Refer to the Warnings and Cautions at the front of this manual 

INSTALLATION PROBLEMS

The Plug & Play functionality of Pickering switch cards generally ensures trouble-free installation.

If you do experience any installation problems you should first ensure that all cards are properly seated in their slots. Improperly mated cards may go undetected by the operating system, or may be detected as a card of an unknown type. They can also cause the computer to freeze at various stages in the boot sequence.

If your system employs a remote control interface you should check the integrity of all remote control interface links. When the system is powered up, and during Windows start-up, you should expect to see periodic activity on the remote control interface RX/TX (yellow) indicators, clearing to leave only the PWR/LNK (green) LEDs illuminated. The RX/TX indicators should show activity when you attempt to access a card.

DIAGNOSTIC UTILITY

The Pickering Diagnostic Utility (accessible through the Programs>>Pickering>>PXI Utilities menu) generates a diagnostic report of the system's PCI configuration, highlighting any potential configuration problems. Specific details of all installed Pickering switch cards are included. All the installed Pickering switch cards should be listed in the "Pilpxi information" section - if one or more cards is missing it may be possible to determine the reason by referring to the PCI configuration dump contained in the report, but interpretation of this information is far from straightforward, and the best course is to contact Pickering support: support@pickeringtest.com, if possible including a copy of the diagnostic report.

In the "VISA information" section, if VISA is not installed its absence will be reported. This does not affect operation using the Direct I/O driver, and is not a problem unless you wish to use VISA. VISA is a component of National Instruments LabWindows/CVI and LabVIEW, or is available as a standalone environment.

If VISA is present and is of a sufficiently recent version, the section "Pipx40 information" should present a listing similar to "Pilpxi information".

Please note that the Diagnostic Utility cannot access cards if they are currently opened by some other application, such as the Test Panels or Terminal Monitor.

THIS PAGE INTENTIONALLY BLANK

SECTION 7 - MAINTENANCE INFORMATION

Refer to the Warnings and Cautions at the front of this manual 

PERIODIC MAINTENANCE

This product and its corresponding chassis do not require any periodic maintenance.

GENERAL CLEANING

- Isolate the electrical power from the chassis and ensure that no user I/O signals are being applied.
- Wipe the product & chassis surfaces with a clean dry anti-static cloth only.

SOFTWARE UPDATE

For PXI modules operating in a PXI chassis, no module software updates are required. For the latest version of the driver please refer to our web site **pickeringtest.com** where links to our Software Download page will provide the latest version of the driver software for the various programming environments encountered.

For PXI modules which are supported in one of Pickering Interfaces' Modular LXI Chassis (such as the 60-102B and 60-103B) no module software update is required. If the module was introduced after the LXI chassis was manufactured the module may not be recognized, in this case the chassis firmware may need upgrading. This is a simple process which is described in the manual for the Modular LXI Chassis.

RELAY LOOK-UP TABLES

The following pages provide a cross reference between the signal paths of the Relay Module and the physical relays on the PCB. The tables can be used in the fault finding process and should be used in conjunction with the corresponding PCB layout diagrams to identify the position of faulty relays.

Table 7.1 - 40-411 Relay Driver Output Signal / Switch Device Cross Reference

Output Signal	Switch No.	Serial Loop	Bit No.
RL1	U101	1	27
RL2	U102	1	19
RL3	U103	1	26
RL4	U104	1	18
RL5	U105	1	25
RL6	U106	1	17
RL7	U107	1	24
RL8	U108	1	16
RL9	U109	1	31
RL10	U110	1	20
RL11	U111	1	30
RL12	U112	1	21
RL13	U113	1	29
RL14	U114	1	22
RL15	U115	1	28
RL16	U116	1	23
RL17	U117	2	26
RL18	U118	2	27
RL19	U119	2	25
RL20	U120	2	24
RL21	U121	1	9
RL22	U122	2	19
RL23	U123	1	8
RL24	U124	2	13
RL25	U125	1	12
RL26	U126	2	9
RL27	U127	1	13
RL28	U128	2	7
RL29	U129	1	14
RL30	U130	1	11
RL31	U131	1	15
RL32	U132	1	10

Output Signal	Switch No.	Serial Loop	Bit No.
RL33	U133	2	31
RL34	U134	2	30
RL35	U135	2	20
RL36	U136	2	23
RL37	U137	2	18
RL38	U138	2	17
RL39	U139	2	14
RL40	U140	2	15
RL41	U141	2	8
RL42	U142	2	4
RL43	U143	2	0
RL44	U144	2	1
RL45	U145	1	5
RL46	U146	1	4
RL47	U147	1	7
RL48	U148	1	6
RL49	U149	2	29
RL50	U150	2	28
RL51	U151	2	22
RL52	U152	2	21
RL53	U153	2	16
RL54	U154	2	12
RL55	U155	2	11
RL56	U156	2	10
RL57	U157	2	5
RL58	U158	2	6
RL59	U159	2	2
RL60	U160	2	3
RL61	U161	1	1
RL62	U162	1	3
RL63	U163	1	0
RL64	U164	1	2

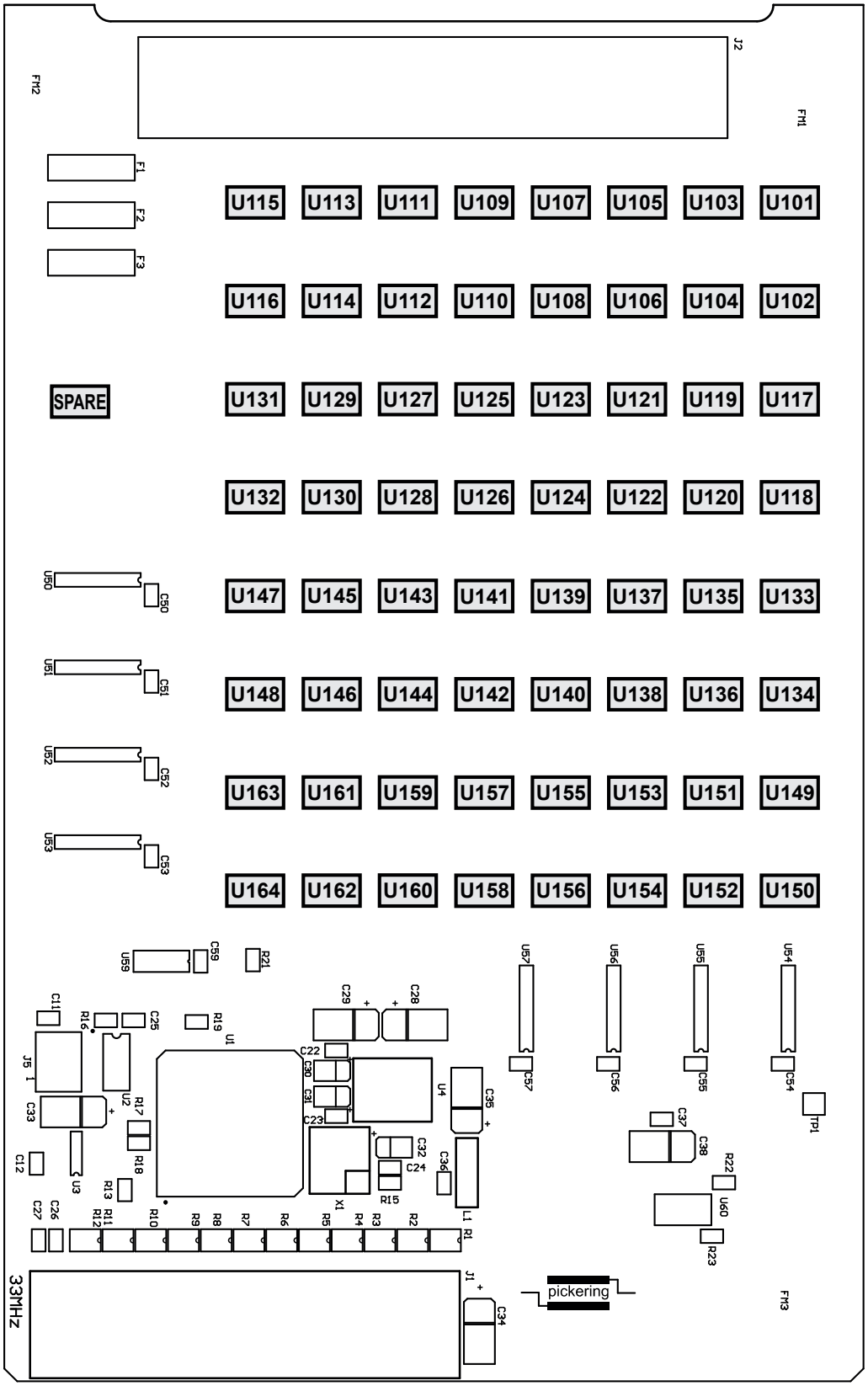

Figure 7.1 - 40-411 Relay Driver Component Layout

THIS PAGE INTENTIONALLY BLANK