PXI 32 Channel Digital I/O Module With Programmable Threshold



© Copyright (2026) Pickering Interfaces. All Rights Reserved.

No part of this publication may be reproduced, transmitted, transcribed, translated or stored in any form, or by any means without the written permission of Pickering Interfaces.

Technical details contained within this publication are subject to change without notice.

FM38792

Technical Support

For Technical Support please contact Pickering Interfaces either by phone, the website or via e-mail.

Warranty

All products manufactured by Pickering Interfaces are warranted against defective materials and workmanship for a period of three years, excluding programmable power supplies, from the date of delivery to the original purchaser. Any product found to be defective within this period will, at the discretion of Pickering Interfaces be repaired or replaced.

Products serviced and repaired outside of the warranty period are warranted for ninety days.

Extended warranty and service are available. Please contact Pickering Interfaces by phone, the website or via e-mail.

Environmental Policy

Pickering Interfaces operates under an environmental management system similar to ISO 14001.

Pickering Interfaces strives to fulfill all relevant environmental laws and regulations and reduce wastes and releases to the environment. Pickering Interfaces aims to design and operate products in a way that protects the environment and the health and safety of its employees, customers and the public. Pickering Interfaces endeavors to develop and manufacture products that can be produced, distributed, used and recycled, or disposed of, in a safe and environmentally friendly manner.

Worldwide Technical Support and Product Information

Pickering Interfaces Headquarters

Stephenson Road, Clacton-on-Sea, CO15 4NL United Kingdom
Tel: +44 (0)1255-687900
e-mail: sales@pickeringtest.com

USA

Tel: +1 781 897 1710
e-mail: ussales@pickeringtest.com

France

Tel: +33 9 72 58 77 00
e-mail: frsales@pickeringtest.com

Germany

Tel: +49 89 125 953 160
e-mail: desales@pickeringtest.com

Sweden

Tel: +46 340-69 06 69
e-mail: ndsales@pickeringtest.com

Czech Republic

Tel: +420 558 987 613
e-mail: desales@pickeringtest.com

China

Tel: +86 4008 799 765
e-mail: chinasales@pickeringtest.com

Malaysia

Tel: +60 12 833 7980
e-mail: aseansales@pickeringtest.com

Safety Symbols

The following safety symbols may be used on the product and throughout the product documentation.

Meaning/Description	Symbol
PROTECTIVE EARTH (GROUND) To identify any terminal which is intended for connection to an external conductor for protection against electric shock in case of a fault, or the terminal of a protective earth (ground) electrode.	
DANGEROUS VOLTAGE To indicate hazards arising from dangerous voltages.	
WARNING/CAUTION An appropriate safety instruction should be followed or caution to a potential hazard exists. Refer to the relevant instructions detailed within the product manual.	
HEAVY If this product is heavy reference should be made to the safety instructions for provisions of lifting and moving.	
STATIC SENSITIVE To indicate that static sensitive devices are present and handling precautions should be followed.	

Contents

Copyright Statement ..... (ii)
Technical Support and Warranty ..... (iii)
Product Safety ..... (iv)
Contents (this page) ..... (v)
Warnings and Cautions ..... (vi)

Section 1

Technical Specification 1.1

Section 2

Technical Description 2.1
- Functional Description 2.1

Section 3

Installation 3.1
- Pre Operation Checks 3.1
- Hardware Installation 3.2
- Software Installation 3.2
- Testing Operation 3.3

Section 4

Programming Guide 4.1
- Programming Options for Pickering PXI Modules 4.1
- Digital Input-Output Sub Units 4.2
- Using Pickering Drivers In LabVIEW 4.6

Section 5

Connector Information 5.1

Section 6

Trouble Shooting 6.1

Section 7

Maintenance Information 7.1
- Verification Procedure 7.2
- Verification Test Results 7.5

Warnings & Cautions

WARNING - Hazardous Environments	Symbol
This product is not specifically designed for use in hazardous environments, for example in explosive atmospheres. If the product is to be used in hazardous environments we recommend that the user ensures suitable protective measures are taken.	

WARNING - Danger of Electric Shock	Symbol
This module may contain hazardous voltages. Before removing the module from the rack remove all supplies and disconnect user I/O signals. Unused slots in the PXI/PXIe/LXI chassis are populated with blanking plates to prevent access to user I/O signals that may be present. Blanking panels are available to order from Pickering in a variety of slot widths. If the product is not used in this manner for example by using an extender card then additional care must be taken to avoid contact with exposed signals. Not to be used in safety critical circuits, refer to the Pickering Interfaces' terms & conditions of sale. This module must not be used for the switching of Mains Circuits. For the switching of voltages up to the module's full specification, Secondary Circuit power supplies and the Device Under Test must be fully isolated from the Mains Circuit and the safety earth. The host chassis must be correctly installed and be connected to mains or factory safety ground, please refer to your chassis installation manual. 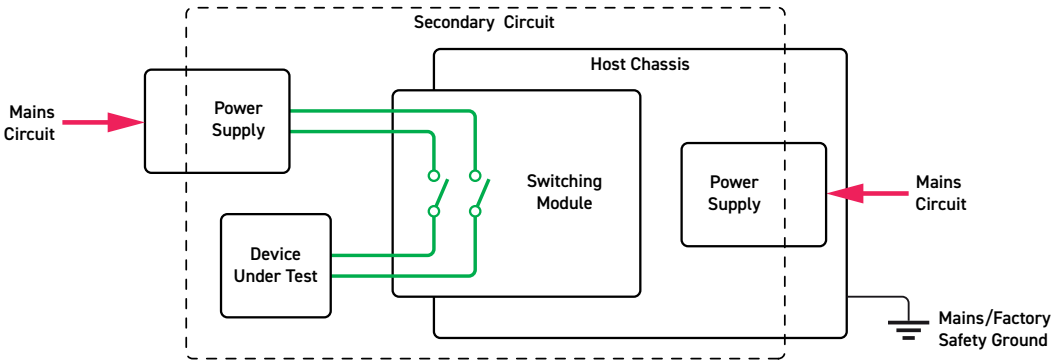 **Diagram Showing Separation Between The Mains Circuit and Secondary Circuit / DUT** For the purposes of this document, a Mains Circuit is an installation classified as Overvoltage Category II up to 300 V. Separation between the Secondary Circuit and Mains Circuit is achieved by a transformer in which the primary windings are separated from the secondary windings by reinforced insulation, double insulation, or a screen connected to the protective conductor terminal.	

CAUTION - Handling of Electrostatic-Sensitive Devices	Symbol
Certain semiconductor devices used in this equipment are liable to damage due to static voltage. Observe the following precautions when handling these devices in their unterminated state, or sub-assemblies containing these devices: • Persons removing sub-assemblies from equipment using these devices must be earthed by a wrist strap and a resistor at the point provided on the equipment. • Soldering irons used during the repair operations must be low voltage types with earthed tips and isolated from the mains voltage by a double insulated transformer. • Outer clothing worn must be unable to generate static charges. • Printed Circuit Boards (PCBs) fitted with these devices must be stored and transported in anti-static bags.	

CAUTION - Product Documentation	Symbol
Suitably qualified & trained users should ensure that the accompanying documentation is fully read and understood before attempting to install or operate the product.	

Safety Instructions

Safety Instructions
All cleaning and servicing requires the equipment to be isolated and disconnected from the power source and user I/O signals (refer to the Maintenance Section). • Appropriate manual handling procedures should be followed as dictated by the weight of the individual module or the combined weight of the modules & chassis. • Should a fault occur with the module or chassis, immediately isolate and disconnect the incoming power to the chassis and the user I/O signals. • Ensure the equipment is installed, operated and maintained by trained and authorised personnel. • For suitably equipped products in the event of an emergency press the red "emergency stop" button situated on the front of the unit.

Section 1 - Technical Specification

- 32-Channel Input
- Dual Programmable Voltage Threshold, 0.3 to 50V
- Parallel Acquisition
- High Input Voltage Tolerance
- 32-Channel Output
- High Side or Low Side Driving
- 0.5A Low Side Sink Capability
- 0.4A High Side Source Capability
- Fully Protected Outputs
- High Side External Voltage Input
- VISA, IVI & Kernel Drivers Supplied for Windows
- Supported by PXI or LXI Chassis
- 3 Year Warranty



The 40-412-101 is a 32-channel Digital I/O module with high output voltage and current capability and a dual variable threshold input.

The 32 outputs can be used for high or low drive and each channel is capable of sourcing 0.4A from the high side or 0.5A sink on the low side. Accidental operation of both high and low side driver on the same channel is prevented by the supplied driver. Outputs are fully protected against over-voltage, over-current and thermal overload, ensuring robust and reliable operation in the toughest test environments. For high side driving, the voltage source is supplied externally, allowing the module to drive high capacity loads separate from the PXI chassis power supply. For low side driving, the external source is not used and the module's output operates an open collector or open drain driver.

The built in protection systems include an over-voltage clamp so the module can drive relay coils without the use of fly back diodes.

The states of the 32 input channels are read via the PXI interface by comparing the input level to two threshold voltages. These can be set between 0.3V and 50V and have a resolution of 12.5mV. This allows the input to be tested against system limits that define a logic low or logic high.

The 40-412-101 uses 32 sets of comparators to synchronously capture all 32 input states and then reads the status in a single operation.

Each input can withstand the accidental application of voltage greater than 100V. The inputs can be user connected to the outputs without risk of damage, allowing the module to operate as 32 channels of independent input and output or as 32 channels of configurable I/O.

Connection to the module's input and outputs is via an easy to use 78-pin D-type connector which is fully supported by a range of connector accessories.

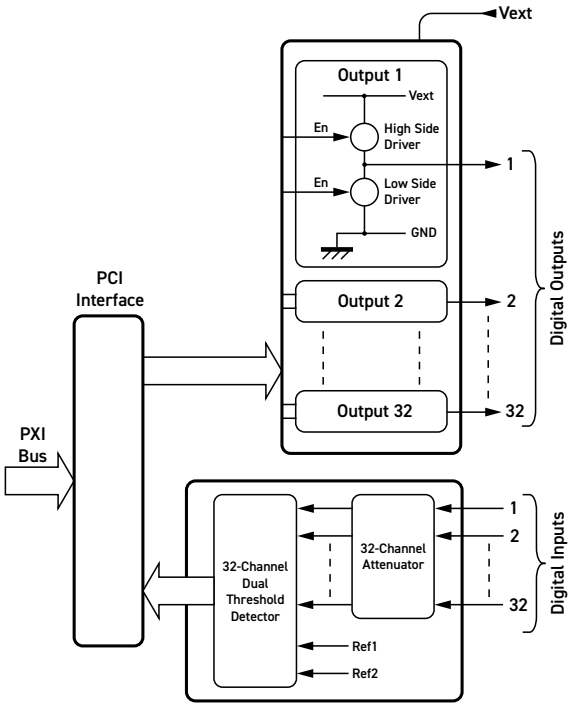

Functional Diagram 40-412-101 32-Channel Digital I/O Module With Parallel Input Acquisition

Section 1 - Technical Specification

Output Specification

No. of Output Channels:	32
Output States:	Driven high, driven low or off.
Low Side Driver Output Resistance:	0.6Ω at 0.5A
High Side Driver Output Voltage:	Vext less 1.5V at 0.4A
Maximum Current:	0.5A for Low Side drivers, 0.4A for High Side drivers, 8A module total.
Maximum Voltage:	+50V*
Output Protection:	Current limited, overvoltage limited, thermal protection. Overvoltage limit can be used to limit back emf generated from inductive loads such as relay coils.
Vext:	User supplied +5V to +50V*, applied to multiple pins of user connector, relative to front panel ground.

* For full voltage rating, signal sources must be fully isolated from mains supply and safety earth.

Input Specification

No. of Input Channels:	32
Logic Threshold:	Compares selected input voltage against two reference voltages, each of which can be set from 0.3 to 50V with 12.5mV setting resolution. 40-412-101 uses faster parallel acquisition from a common pair of threshold voltages.
Settling Time:	5µs following a state change. Read back time for all 32 states 50µs typical.
Channel Selection:	Single channel selection or automated sequential access to all 32 channels.
Maximum Input Voltage:	100V*
Input Impedance:	1MΩ

* For full voltage rating, signal sources must be fully isolated from mains supply and safety earth.

Power Requirements

+3.3V	+5V	+12V	-12V
0	0.1A	0.05A	0.05A

Mechanical Characteristics

Single slot 3U PXI (CompactPCI card).
Module weight: 180g.
3D models for all versions in a variety of popular file formats are available on request.

Connectors

PXI bus via 32-bit P1/J1 backplane connector.
Signals via front panel 78-pin male D-Type connector, for pin outs please refer to the operating manual.

Operating/Storage Conditions

Operating Conditions

Operating Temperature:	0°C to +55°C
Humidity:	Up to 90% non-condensing
Altitude:	5000m

Storage and Transport Conditions

Storage Temperature:	-20°C to +75°C
Humidity:	Up to 90% non-condensing
Altitude:	15000m

PXI & CompactPCI Compliance

The module is compliant with the PXI Specification 2.2. Local Bus, Trigger Bus and Star Trigger are not implemented.

Uses a 33MHz 32-bit backplane interface.

Safety & CE Compliance

All modules are fully CE compliant and meet applicable EU directives: Low-voltage safety EN61010-1:2010, EMC Immunity EN61326-1:2013, Emissions EN55011:2009+A1:2010.

Product Order Codes

32-Channel Digital I/O Module - Parallel Input Acquisition, Programmable Threshold	40-412-101

Product Customization

Pickering PXI modules are designed and manufactured on our own flexible manufacturing lines, giving complete product control and enabling simple customization to meet very specific requirements.

All customized products are given a unique part number, fully documented and may be ordered at any time in the future. Please contact your local sales office to discuss.

Mating Connectors & Cabling

For connection accessories for the 40-412-101 please refer to the 90-006D 78-pin D-Type Connector Accessories data sheet where a complete list and documentation can be found for accessories, or refer to the Connection Solutions catalog.

Functional Description

A functional block diagram is provided in Figure 2.1. The Module is powered by the +5 V, +12 V and -12 V supplies from the PXI backplane via Compact PCI connector J1. The interface to the user's equipment is via the front panel mounted 78-pin D-type connector, J2.

The module's 32 channel output section comprises High Side and Low Side drivers U26 to U89 and Shift Registers U18 to U25. The shift registers control the output drivers and are supplied with serial data from the PCI Bridge, U1, via the control logic. Each output can be switched to either sink current to the GND terminal via a Low Side driver device, or source current from the Vext terminal via a High Side driver device.

The 40-412-101 has parallel input acquisition with the input circuitry fitted to a daughter board which is mounted on top of the mother board. The module's 32 input channels are first fed through an attenuator circuit, then comparator devices U17 to U32 determine whether each input signal is greater than the two thresholds programmed by the user. The resultant 64 data bits are latched by U33 to U40 and read by the PCI Bridge.

The PCI Bridge is configured by EEPROM U2, the module configuration is stored in EEPROM U11.

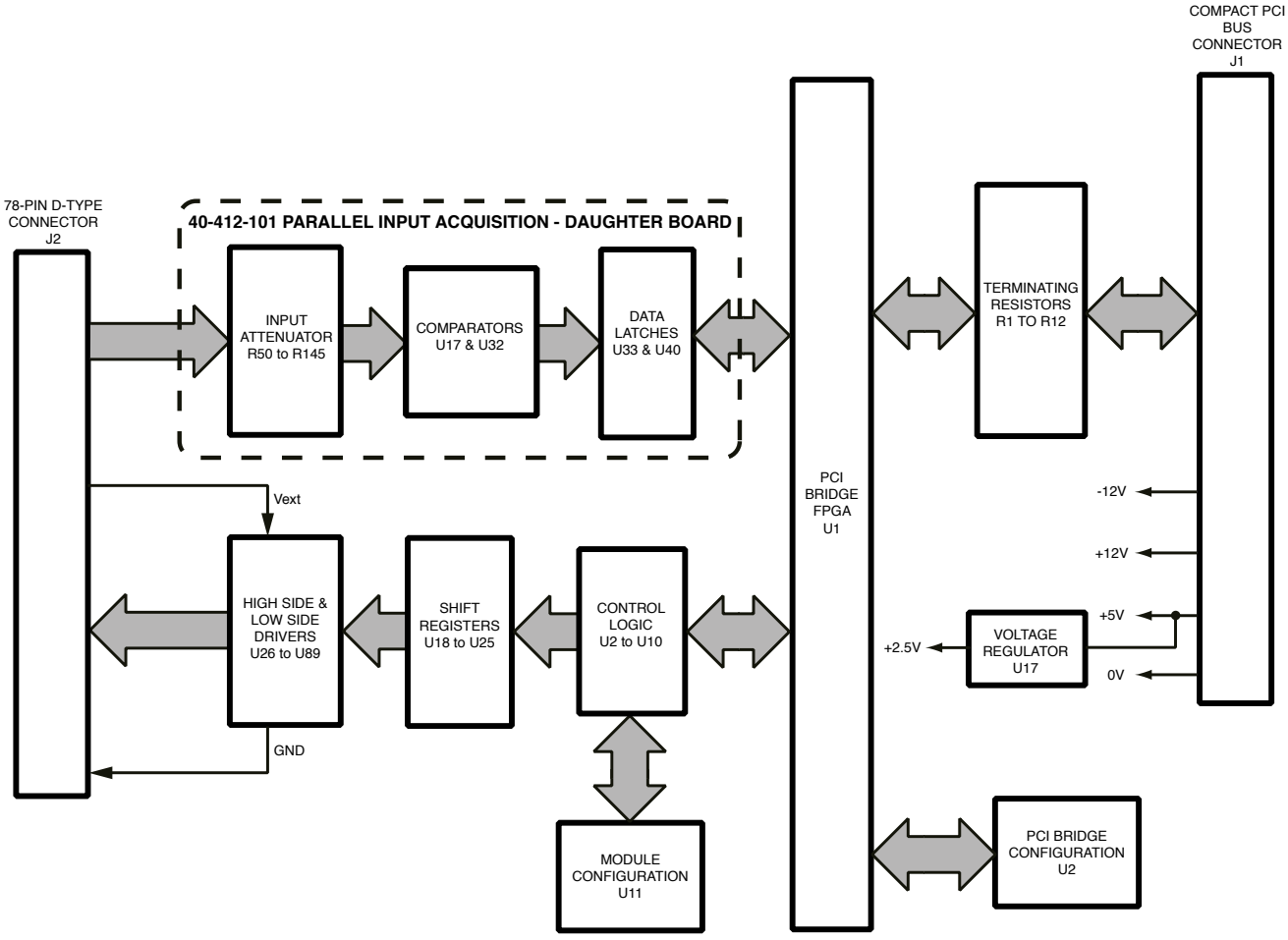

Figure 2.1 - Digital I/O Module 40-412-101: Functional Block Diagram

GUIDANCE ON USING THE 40-412

Output Drivers

The 40-412 provides two output driver types on each of the 32 channels:

- High Side Driver. The high side driver allows the user to set the output voltage actively high to an externally supplied voltage source. The external voltage source can be between +5 V and +50 V relative to ground.
- Low side driver. The low side driver actively connects the output to ground.

The software driver inhibits both the high and low side drivers being turned on at the same time.

Each driver output is fully protected from thermal, voltage or current overloads. However, continuous operation at voltages beyond the stated ratings may cause damage.

Each driver contains overvoltage protection that can be used to protect the driver from inductive back EMF spikes generated when turning coil currents off. Using this protection to manage the back EMF will not cause damage to the driver, however the sudden current change can generate EMC events. Pickering Interfaces recommends that where possible the user should provision local measures (such as a flywheel diode) to limit the back EMF current flow through the cables.

The user can select both drivers to be inactive to provide a tri-state (open) output voltage.

The external voltage source needs to be applied only if the high side driver is required to be used, it can grounded or left unconnected if the high side driver is not required to be used.

Driving Inductive Loads

Users can use the high/low side drivers to drive highly inductive loads such as the coils of relays or solenoids, the protection circuits in the 40-412 will ensure the drivers are not easily damaged. However, it is recommended that precautions are taken to manage the resulting EMC issues that might arise.

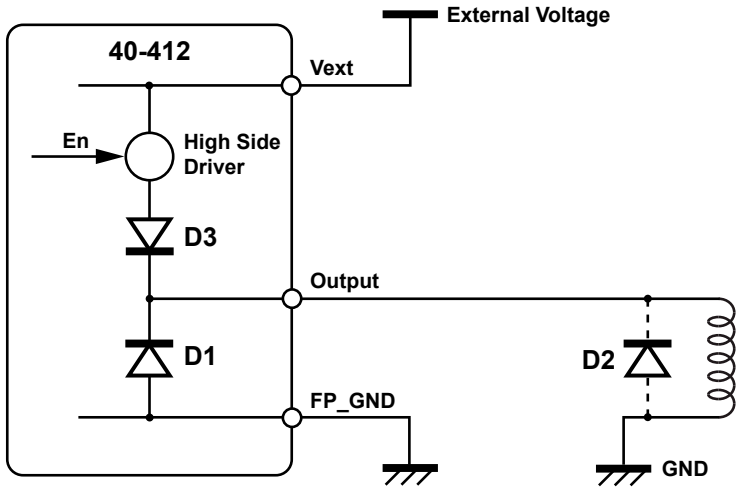

Figure 2.2 - Using the 40-412: Driving an inductive load with a High Side Driver

When using the high side driver, on driver closure, current will build in the coil until it reaches a steady state. When the driver is opened, the energy in the inductor will need to be discharged. This discharge can be through the diode inside the 40-412 (D1, Figure 2.2) - this will not damage the 40-412. However, the discharge may cause a ground spike that may result in EMC emission. We recommend that where possible a local diode is fitted (D2, Figure 2.2) which will reduce the ground current flowing and reduce the EMC emissions.

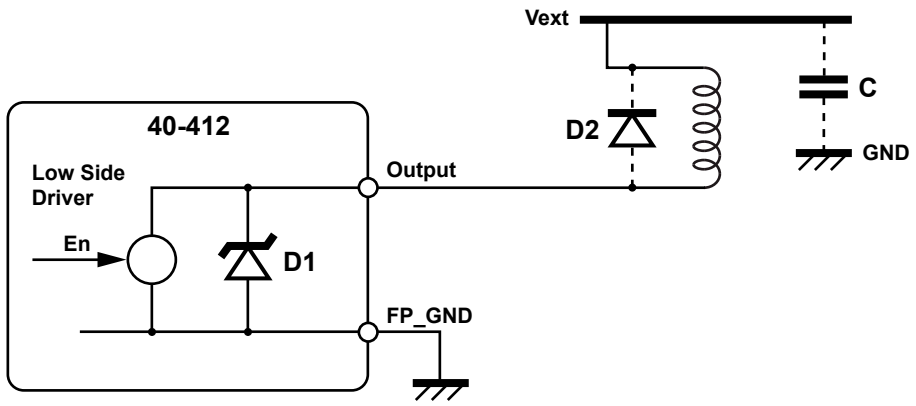

Figure 2.3 - Using the 40-412: Driving an inductive load with a Low Side Driver

When using the low side driver a similar effect occurs when the driver is opened. The inductive energy stored is discharged by the voltage on the 40-412 output becoming positive and a clamp diode (D1, Figure 2.3) acting to protect the driver. It is recommended that the user fits a flywheel diode (D2, Figure 2.3) to discharge the inductive energy. If a flywheel diode is not fitted, the 40-412 will clamp the output at a voltage between 60 V and 80 V relative to the front panel ground, the voltage being dependent upon the breakdown voltage of D1, Figure 2.3.

Driving Capacitive Loads

The 40-412 can be used to drive capacitive loads. When the driver is closed, the current limit protection circuit will limit the current flowing into the capacitive load. Continuous rapid connection and disconnection to a capacitive load may result in the thermal protection circuits preventing further operation. If this occurs, simply allow the 40-412 to cool down, after which normal operation will resume.

Vext Connection

When using the high side drivers, Vext is required to provide the current to the 40-412 output circuits. The Vext connection is made using multiple pins on the D-type connector. It is strongly recommended that if high load currents are expected, then all the available pins are used to spread the current load in order to avoid damaging the connector. The connections to Vext are internally linked together in the 40-412, so specific pins are not required to be used for a particular bank of drivers. To maximize connector life we suggest using 5 Amps per pin or less. Users should not apply negative voltages (relative to ground) to Vext or apply voltages greater than +50 V.

FP_GND Connection

When using the low side drivers, FP_GND is required to sink the current from the 40-412 output circuits. The FP_GND connection is made using multiple pins on the D-type connector. It is strongly recommended that if high load currents are expected, then all the available pins are used to spread the current load in order to avoid damaging the connector. The connections to FP_GND are internally linked together in the 40-412, so specific pins are not required to be used for a particular bank of drivers. To maximize connector life we suggest using 5 Amps per pin or less. Spare FP_GND Connections can be used for the purpose of screening or shielding in cable assemblies or connector blocks

Using High and Low Side Drivers

The user can select on an individual channel basis whether a high side or low side driver is used. In Figure 2.2, D3 prevents the discharge of energy into Vext when the low side driver is operated.

Input Connection

Each of the 32 channels can be compared to two voltage references levels. The reference level is set by a 12 bit digital word with full scale corresponding to 50 V and zero to 0 V. The use of two threshold levels makes it easier for a user to determine the status of the input. For example, a typical application might be in a system operating from 28 V supplies where the state needs to be established using a criteria equivalent to 20% of the supply:

- First threshold is set to 5.6 V (20% of 28 V), a low condition will indicate the state is low.
- Second threshold is set to 22.4 V (80% of 28 V) to confirm a high state.
- Intermediate conditions can be detected since the input is above the first threshold but below the second threshold.

Since the state is read at the same instant against each threshold, measurements are not confused by dynamically changing voltages.

As the 40-412-101 has parallel input sampling, all inputs are compared to the programmable voltage reference levels at the same time.

Vext and GND Break Detection

Some applications require a test to ensure that an input connection is not broken. For a connection that is set be at Vext the 1MΩ input impedance to the input will drag the voltage down to ground in the event of a break. To detect a break to a signal that is supposed to be at ground potential this will not give a good indication. However, if the input is connected by an external 1MΩ resistor to Vext then in the event that there is a break the signal will go to 0.5 of Vext and the dual detection thresholds can be set to detect this.

Example:
Vext is 28 V, the thresholds are set at 4 V and 24 V. The input will appear to be in the mid voltage state of 14 V, greater than 4 V but less than 24 V and the signal break can be detected.

Settling Time

The 40-412-101 uses a synchronous acquisition process that samples all the 32 states at the same time, eliminating the settling time constants associated with the switching system. The 40-412-101 is suited to applications where states may be changing and users wish the states to be sampled at the same instant in time. The input states are captured and then read back to the PXI control system through a serial process. The read back speed is dependent on the speed of the controller, modern controllers will read back the 32 states in between about 10 µs and 30 µs.

Connecting Input and Output

It is permitted for a user to connect an input and output channel together using external wiring (for example in a connector block). In this way the input can be used to check that the output connection is being correctly driven.

It should be noted that if the output is set tri-state (both drivers off) the input impedance to the input channel will drag the output voltage to a low state in the absence of any external source of voltage or current.

Note that when the inputs and outputs are wired together by the user and both the high side and low side drivers are off, the input/output state will be asserted low. This is due to the impedance of the input connection.

Section 3 - Installation

Refer to the Warnings and Cautions at the front of this manual

Modular products require installation in a suitable PXI/LXI chassis. The module is designed for indoor use only.

Pre-operation Checks (Unpacking)

1. Check the module for transport damage and report any damage immediately to Pickering Interfaces. Do not attempt to install the product if any damage is evident.
2. Position the chassis relative to any other equipment the module(s) will connect with. Ensure the chassis is not connected to the electrical supply.
3. Ensure that the designated area for the chassis containing the module is of flat and solid construction to withstand and support the combined weight of the module(s) and chassis.

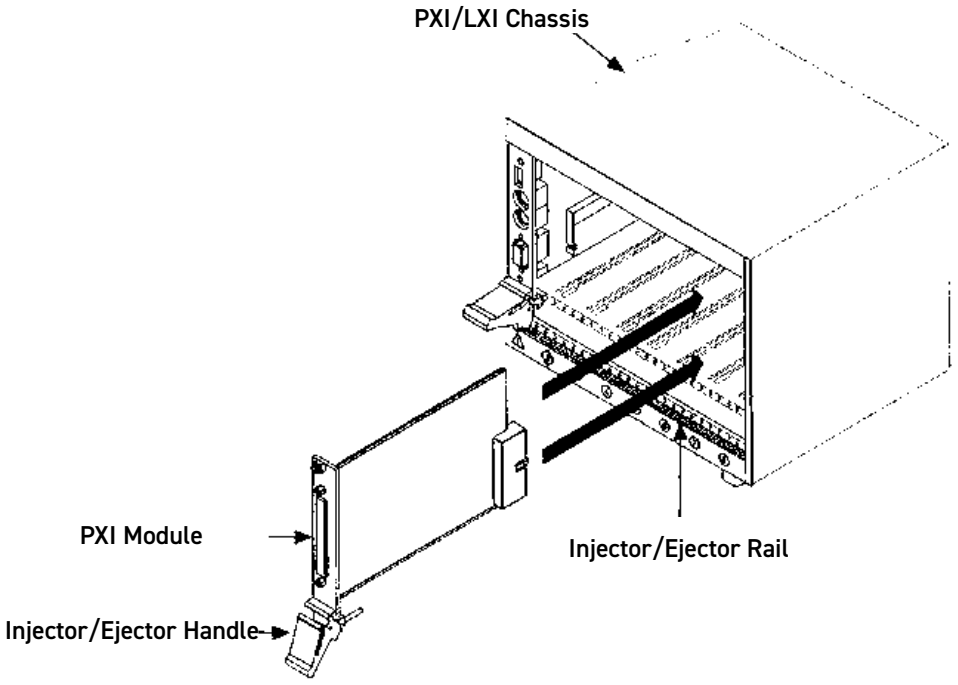

Figure 3.1 - Installing the Module into a PXI/cPCI/LXI Chassis

Hardware Installation Electrical Connection (Chassis)

The chassis must be electrically installed in accordance with local regional electrical codes by a qualified engineer.

The chassis must be grounded.

Electrostatic discharge can damage the components on the module. To avoid such damage in handling the board refer to page vi.

Ensure that there is adequate ventilation.

The module should be installed in accordance with the following procedure:

1. Ensure that the system is turned OFF but still connected to mains so that it remains grounded.
2. Choose an appropriate slot in the rack.
3. Remove the blanking plate for the chosen slot.
4. Ensure that the injector/ejector handle is in its downward position. Align the module with the card guides on the top and bottom of the slot.
   Do not raise the injector/ejector handle whilst inserting the module as the module will not insert properly.
5. Hold the handle whilst slowly sliding the module into the card guides until the handle catches on the injector/ejector rail (refer to Figure 3.1).
6. Raise the injector/ejector handle until the module firmly seats into the backplane. The front panel of the module should be flush with the front panel of the chassis.
7. Secure the front panel of the module using both screws to the chassis front panel mounting rails.
8. In a system employing a remote control interface to connect an external controller to a PXI chassis or to link multiple chassis, power-up the system as follows:
   a. For a system comprising an external controller and one chassis, power up the chassis before powering up the external controller.
   b. For a system comprising more than one chassis, turn ON the last chassis in the system followed by the penultimate, etc, and finally turn ON the external controller or chassis containing the system controller.
9. For Pickering Interfaces modular LXI installation there is no requirement to use any particular power up sequence.

Software Installation

First install the appropriate Pickering PXI switch card drivers by running the installer program Setup.exe (provided in a compressed zip file), either from the CD-ROM supplied, or by downloading the latest version from our website: pickeringtest.com - the recommended method. Setup is accompanied by a ReadMe file containing additional installation information. A single installation covers all Pickering switching and simulation PCI, PXI and PXIe products.

When installation completes, the installed drivers' ReadMe file is offered for display. It can also be displayed later using a shortcut on the Programs>>Pickering menu.

If you are not a LabVIEW user you should choose the "full" version, and once that has been installed run the LabVIEW Runtime Engine installer via the shortcut on the Programs>>Pickering menu. In the absence of LabVIEW the Runtime Engine is required to support the Pickering Test Panels application.

Testing Operation

After installation of the hardware and Pickering PXI Driver software package start the General Soft Front Panel (GSFP) using the desktop icon or via the Start menu (***Start Menu-> Pickering Interfaces Ltd -> General Soft Front Panel***).



Figure 3.2 - General Soft Front Panel Icon

A selector panel will appear, listing all installed Pickering PCI, PXI or LXI switch cards and resistor cards. Click on the card you wish to control, and a graphical control panel is presented allowing operation of the card. Panels can be opened simultaneously for all the installed cards.

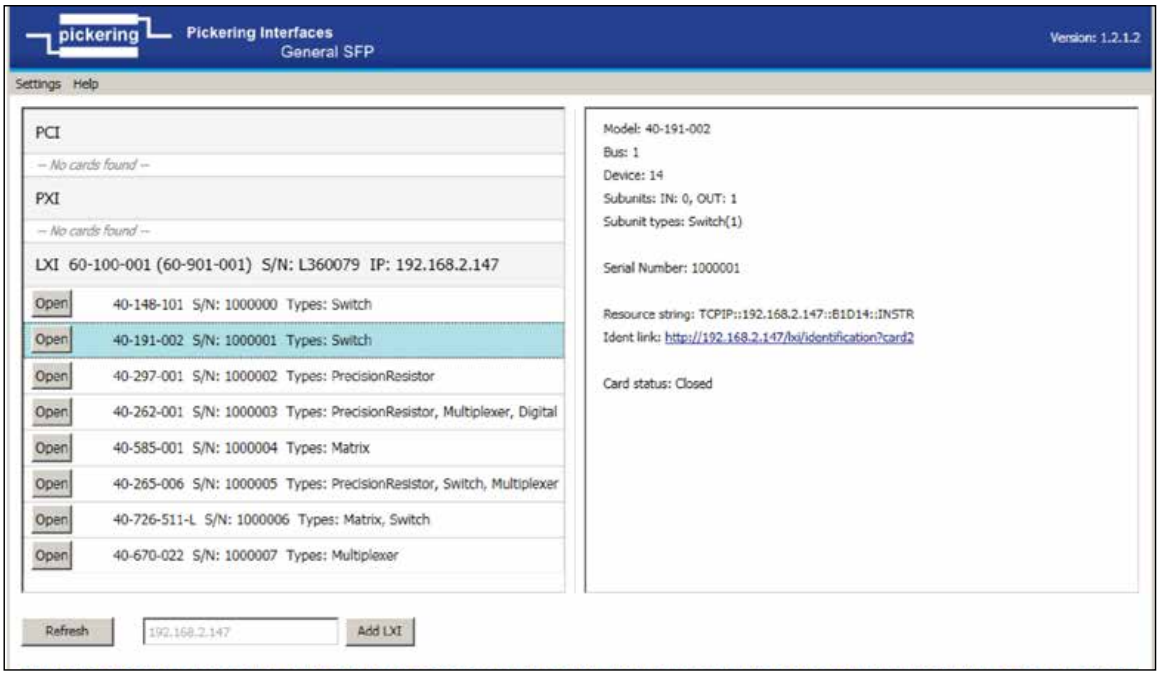

Figure 3.3 - General Soft Front Panel Selector

More details how to use the GSFP can be found in the manual, via menu ***Help\Manual***.

Section 4 - Programming

Programming options for Pickering Interfaces PXI Modules

For information on the installation and use of drivers and the programming of Pickering's products in various software environments, please refer to the Software User Manual.

This is available as a download from:
pickeringtest.com/support/software-drivers-and-downloads

Also, it can be accessed from the DVD supplied with the product:
<DVD_DRIVE>\downloads\Documentation\Software-Manual.pdf

40-412 Digital Input-Output Sub Units

This section describes the 40-412-101 sub units and the relevant Pickering VISA Driver and Direct Driver functions used to program them.

Output Sub-Units Model 40-412-101			Description	
Number	Type	Size		
1	DIGITAL	32	Controls output SINK driver states, each bit: 0 = INACTIVE 1 = ACTIVE	
2	DIGITAL	32	Controls output SOURCE driver states, each bit: 0 = INACTIVE 1 = ACTIVE	
Applicable Functions			VISA Driver	Direct Driver
			pipx40_setChannelState	PIL_OpBit
			pipx40_getChannelState	PIL_ViewBit
			pipx40_setChannelPattern	PIL_WriteSub
			pipx40_getChannelPattern	PIL_ViewSub
			pipx40_clearSub	PIL_ClearSub
			pipx40_setMaskState	PIL_MaskBit
			pipx40_getMaskState	PIL_ViewMaskBit
			pipx40_setMaskPattern	PIL_WriteMask
			pipx40_getMaskPattern	PIL_ViewMask
			pipx40_clearMask	PIL_ClearMask

Output Sub-Units Model 40-412-101			Description	
Number	Type	Size		
3	DIGITAL	12	Set input threshold 1 (12-bit binary value, 50 V corresponding to full scale)	
4	DIGITAL	12	Set input threshold 2 (12-bit binary value, 50 V corresponding to full scale)	
Applicable Functions			VISA Driver	Direct Driver
			pipx40_setChannelPattern	PIL_WriteSub
			pipx40_getChannelPattern	PIL_ViewSub
			pipx40_clearSub	PIL_ClearSub

Note: The highlighted functions above are of special interest.

Input Sub-Unit Model 40-412-101			Description	
Number	Type	Size		
1	INPUT	64	Gets levels of all 32 input channels, 2 bits each, as follows: 00 = below threshold 2, below threshold 1 01 = below threshold 2, above threshold 1 10 = above threshold 2, below threshold 1 11 = above threshold 2, above threshold 1	
Applicable Functions			VISA Driver	Direct Driver
			pipx40_readInputPattern	PIL_ReadSub

Using the Direct Driver or VISA Driver to control the 40-412-101

This section provides some code fragments which show how to control the 40-412-101 using either the Direct I/O Driver or the VISA Driver.

Once the drivers are installed the manual "Sys40Prg.pdf" and driver help files which fully describes these functions can be found in the Pickering folder(s) or the Pickering entries on your Start Menu.

The card must be opened before use and closed after using the following function calls:

Direct I/O Driver - Open with `PIL_OpenCards` or `PIL_OpenSpecifiedCard` and close with `PIL_CloseCards` or `PIL_CloseSpecifiedCards` respectively.

VISA Driver - Open with `pipx40_init`, and close with, `pipx40_close`.

Setting the output SINK driver states

Using the Pickering Direct I/O Driver:

```
DWORD SubUnit = 1; //Sub unit 1 specifies sink drivers
PIL_ClearSub(CardNo, SubUnit);     //clear all sink driver channels to inactive
PIL_OpBit(CardNo, SubUnit, 5, 1); //set channel 5 to active
PIL_OpBit(CardNo, SubUnit, 5, 0); //set channel 5 to inactive
```

Using the VISA driver:

```
ViUInt32 SubUnit = 1;              //Sub unit 1 specifies sink drivers
pipx40_clearSub(vi, SubUnit);      //clear all sink driver channels to inactive
pipx40_setChannelState (vi, SubUnit, 5, 1);  //set channel 5 to active
pipx40_setChannelState (vi, SubUnit, 5, 0);  //set channel 5 to active
```

Setting the output SOURCE driver states:

These are programmed in the same way as the SINK drivers above but using sub unit 2

Setting threshold 1

12 bits of sub-unit 3 are used to program threshold 1 and 12 bits of sub-unit 4 are used to program threshold 2:

Using the Pickering Direct I/O Driver:

```
DWORD SubUnit = 3; //Sub unit 3 specifies input threshold 1
double voltage = 25.0;             //set voltage to required threshold
DWORD Threshhold;
Threshhold = 4095*(voltage/50.0);
PIL_ClearSub(CardNo, SubUnit);
PIL_WriteSub(CardNo, SubUnit, &Threshhold);
```

Using the VISA driver:

```
ViUInt32 SubUnit = 3;              //Sub unit 3 specifies input threshold 1
ViReal voltage = 25.0;             //set voltage to required threshold
ViUInt32 Threshhold;
Threshhold = 4095*(voltage/50.0);
pipx40_clearSub(vi, SubUnit);
pipx40_setChannelPattern (vi, SubUnit, &Threshhold);
```

Setting threshold 2

These are controlled in the same way as threshold 1 but set the sub unit to 4.

Reading all 32 Input Levels In Parallel (see above for setting the comparison threshold levels)

Using the Pickering Direct I/O Driver:

```
DWORD SubUnit;
SubUnit = 1;       //Sub unit 1 specifies all 32 inputs
DWORD InputChannelValues[2];
PIL_ReadSub(CardNo, SubUnit, InputChannelValues)
//return 32 values, 2 bits per value
```

Using the VISA driver:

```
ViUInt32 SubUnit;
SubUnit = 1;       //Sub unit 1 specifies all 32 inputs
ViUInt32 InputChannelValues[2];
pipx40_readInputPattern(vi, SubUnit, InputChannelValues);
//return 32 values, 2 bits per value
```

Input Threshold Voltage Bit Patterns

The following table gives a bit pattern for a particular input threshold voltage and is applicable to the programmable threshold levels 1 and 2. The input voltage is compared to the two programmable levels and the result is reflected in the state of two "Input Level" bits which can be read by software. Full scale setting (Binary 4095) is nominally 50 V, the 12 bits provide a resolution of 12.5 mV nominal. Some typical values are shown below:

Threshold Voltage/ Bit Pattern Cross Reference				
Threshold Voltage	**Bit Pattern †**		**Threshold Voltage**	**Bit Pattern †**
0	000000000000		5	000110011001
0.0125	000000000001		10	001100110011
0.025	000000000010		15	010011001100
0.05	000000000100		20	011001100110
0.1	000000001000		25	100000000000
0.2	000000010000		30	100110011001
0.4	000000100000		35	101100110011
0.79	000001000000		40	110011001100
1.57	000010000000		45	111001100110
3.13	000100000000			
6.26	001000000000			
12.5	010000000000			
25	100000000000			
50	111111111111			

† The bit pattern in Testpanels will appear reversed

Using Pickering Drivers In LabVIEW

Most Pickering drivers include a LabVIEW wrapper to permit full operation of the Pickering product from the LabVIEW environment. These wrappers are normally installed to the current LabVIEW folder system during installation of the Pickering driver.

The process of controlling a Pickering product normally consists of the following steps:

1. Open a control session on the product.
2. Use functions in the library to operate the product.
3. Close the control session.

Following is a simple example of the use of the most common Pickering drivers:

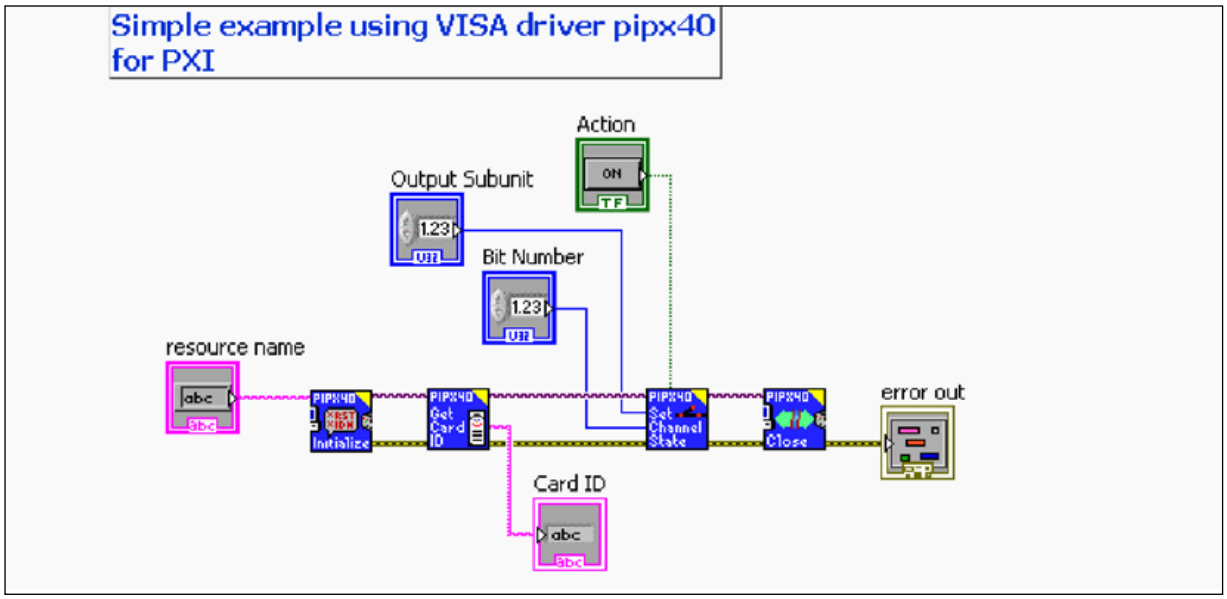

Example Use of Pickering Drivers in LabVIEW

To download LabVIEW examples, please go to:

Using Pickering Drivers in LabVIEW

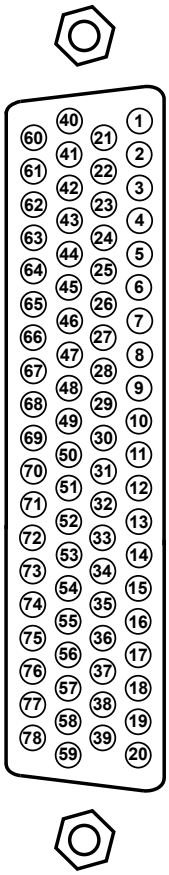

Figure 5.1 - Digital I/O Module 40-412: Pinouts (78-pin male D-type connector viewed from front of module)

NOTE: See Figures 5.2 and 5.3 overleaf for diagrams outlining the connection of the outputs to make use of the High-Side or Low-Side drivers

78-pin D-Type Plug							
Pin No.	**Signal**	**Pin No.**	**Signal**	**Pin No.**	**Signal**	**Pin No.**	**Signal**
1	Vext	21	Vext	40	Vext	60	Vext
2	Output 1	22	Output 2	41	Output 3	61	Output 4
3	Output 5	23	Output 6	42	Output 7	62	Output 8
4	Output 9	24	Output 10	43	Output 11	63	Output 12
5	Output 13	25	Output 14	44	Output 15	64	Output 16
6	Output 17	26	Output 18	45	Output 19	65	Output 20
7	Output 21	27	Output 22	46	Output 23	66	Output 24
8	Output 25	28	Output 26	47	Output 27	67	Output 28
9	Output 29	29	Output 30	48	Output 31	68	Output 32
10	FP_GND	30	FP_GND	49	FP_GND	69	FP_GND
11	Input 1	31	Input 2	50	Input 3	70	Input 4
12	Input 5	32	Input 6	51	Input 7	71	Input 8
13	Input 9	33	Input 10	52	Input 11	72	Input 12
14	Input 13	34	Input 14	53	Input 15	73	Input 16
15	Input 17	35	Input 18	54	Input 19	74	Input 20
16	Input 21	36	Input 22	55	Input 23	75	Input 24
17	Input 25	37	Input 26	56	Input 27	76	Input 28
18	Input 29	38	Input 30	57	Input 31	77	Input 32
19	FP_GND	39	FP_GND	58	FP_GND	78	FP_GND
20	FP_GND			59	FP_GND		

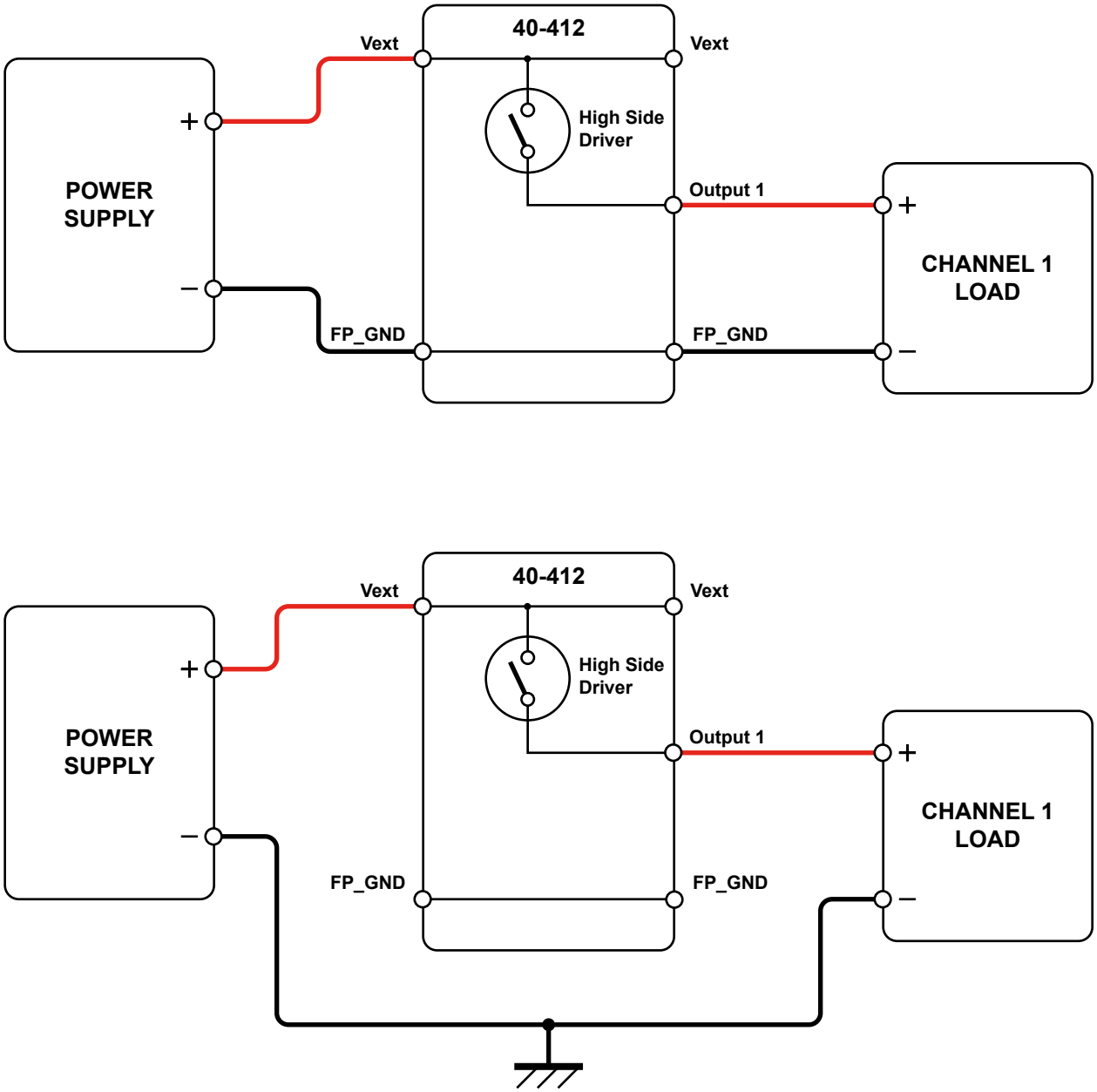

Figure 5.2 - Examples of driving a load using the High-Side driver

Note: The power supply must be referenced to ground either by a separate ground connection or by connection to FP_GND which is internally connected the PXI chassis ground.

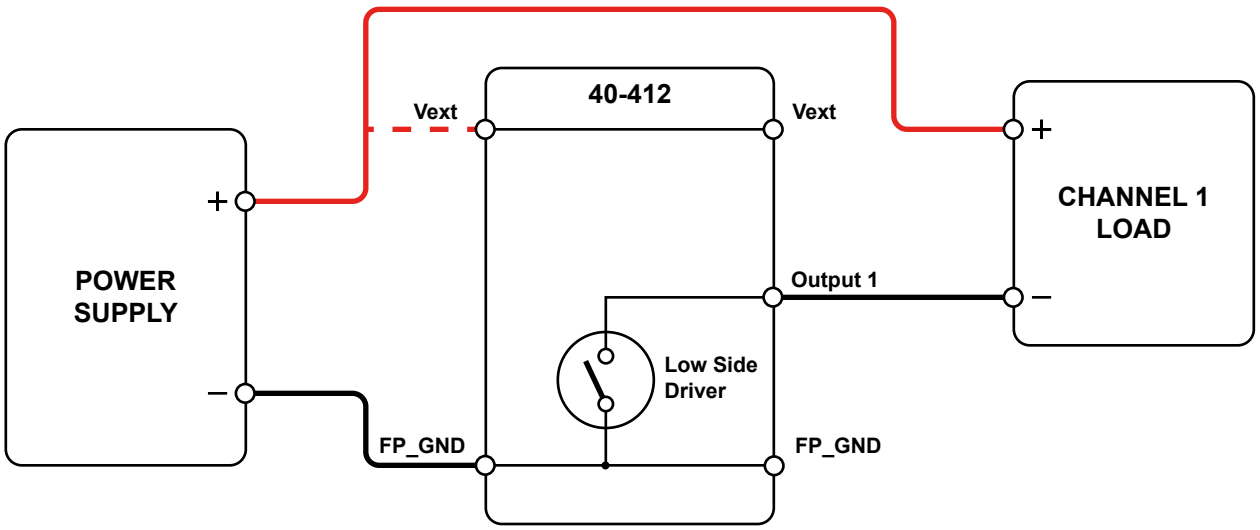

Figure 5.3 - Example of driving a load using the Low-Side driver

Notes:

1. The Power Supply must be referenced to FP_GND for correct operation.

2. Vext can be connected to the supply positive for a mixture of Low-Side and High-Side drivers.

Section 6 - Troubleshooting

Refer to the Warnings and Cautions at the front of this manual. 

Installation Problems

The Plug & Play functionality of Pickering switch cards generally ensures trouble-free installation.

If you do experience any installation problems you should first ensure that all cards are properly seated in their slots. Improperly mated cards may go undetected by the operating system, or may be detected as a card of an unknown type. They can also cause the computer to freeze at various stages in the boot sequence.

If your system employs a remote control interface you should check the integrity of all remote control interface links. When the system is powered up, and during Windows start-up, you should expect to see periodic activity on the remote control interface RX/TX (yellow) indicators, clearing to leave only the PWR/LNK (green) LEDs illuminated. The RX/TX indicators should show activity when you attempt to access a card.

Diagnostic Utility

The Pickering Diagnostic Utility (accessible through the Programs>>Pickering>>PXI Utilities menu) generates a diagnostic report of the system's PCI configuration, highlighting any potential configuration problems. Specific details of all installed Pickering switch cards are included. All the installed Pickering switch cards should be listed in the "Pilpxi information" section - if one or more cards is missing it may be possible to determine the reason by referring to the PCI configuration dump contained in the report, but interpretation of this information is far from straightforward, and the best course is to contact Pickering support: support@pickeringtest.com, if possible including a copy of the diagnostic report.

In the "VISA information" section, if VISA is not installed its absence will be reported. This does not affect operation using the Direct I/O driver, and is not a problem unless you wish to use VISA. VISA is a component of National Instruments LabWindows/CVI and LabVIEW, or is available as a standalone environment.

If VISA is present and is of a sufficiently recent version, the section "Pipx40 information" should present a listing similar to "Pilpxi information".

Please note that the Diagnostic Utility cannot access cards if they are currently opened by some other application, such as the Test Panels or Terminal Monitor.

Section 7 - Maintenance Information

Refer to the Warnings and Cautions at the front of this manual. 

Periodic Maintenance

This product and its corresponding chassis do not require any periodic maintenance.

General Cleaning

- Isolate the electrical power from the chassis and ensure that no user I/O signals are being applied.
- Wipe the product & chassis surfaces with a clean dry anti-static cloth only.

Software Update

For PXI modules operating in a PXI chassis, no module software updates are required. For the latest version of the driver please refer to our web site pickeringtest.com where links to our Software Download page will provide the latest version of the driver software for the various programming environments encountered.

For PXI modules which are supported in one of Pickering Interfaces' Modular LXI Chassis (such as the 60-102B and 60-103B) no module software update is required. If the module was introduced after the LXI chassis was manufactured the module may not be recognized, in this case the chassis firmware may need upgrading. This is a simple process which is described in the manual for the Modular LXI Chassis.

Relay Look-up Tables

The following pages provide a cross reference between the signal paths of the product and the physical relays on the PCB. The tables can be used in the fault finding process and should be used in conjunction with the corresponding PCB layout diagrams to identify the position of faulty relays.

Verification procedure

The 40-412 contains no adjustable parts, performance is guaranteed by the design without adjustment.

The 40-412 does not require routine verification. However some users may need to have a routine procedure for verification imposed on a system for other reasons, so the following is a procedure which demonstrates that the 40-412 is working correctly. It tests that the output drives are operating and that the digital inputs can read back their status.

Required Test Equipment

The following is required to verify the 40-412:

A voltage source capable of being set to 0 V and 20 V.

A fixture which can e created from a 78-pin D-type mating connector or a Pickering Interfaces accessory such as 40-960-078 or 40-965-078.

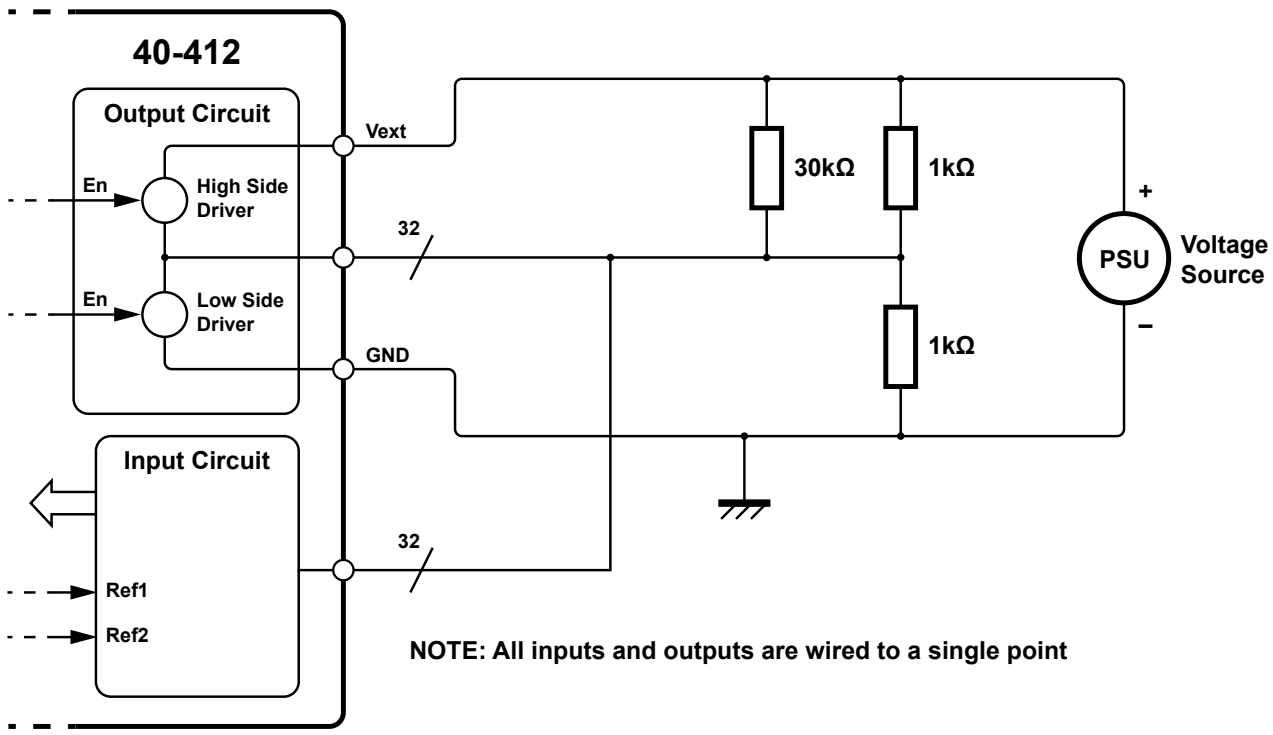

Figure 7.1 - 32-Channel Digital I/O Module - Verification Test Set-up

The user should create a test fixture as shown in Figure 7.1

The power supply should be connected to the 40-412 ground and Vext pins, ensuring the positive terminal is connected to Vext.

NOTE: The power supply should be set with a 100 mA current limit.

Two 1 kΩ resistors and a 30 kΩ resistor should be wired as shown so they form a 2:1 potential divider. The 30 kΩ resistor compensates (approximately) for the input impedance of the digital inputs (1 MΩ, 32 channels).

All 32 channel drivers are connected to the potential divider mid-point. All 32 digital inputs are connected to the potential divider mid-point.

Test Procedure

The test can be automated or can be conducted using the SFP supplied.

Digital Input Test

The following test is conducted with the drivers all set to off.

Set the voltage source to 0 V. The fixture potential divider output will now be 0 V.

Set both input Threshold voltages to 0.5 V. Check that the responses are all low for all the 32 channels.

NOTE: When using the Soft Front Panel, a threshold voltage of 0.5 V equates to 101000 in binary (0.5 / 0.0125 = 40 = 101000). See Figure 7.2.

Set the voltage source to 20 V. The fixture potential divider output will now be 10 V.

Set both input Threshold voltages to 9.5 V. Check that the responses are all high for all the 32 channels.

Set Threshold Voltage 1 to 9.5 V and Threshold Voltage 2 to 10.5 V. Check all responses from Threshold Voltage 1 are high and all from Threshold Voltage 2 are low.

NOTE: When using the Soft Front Panel, a threshold voltage of 9.5 V equates to 1011111000 in binary (9.5 / 0.0125 = 760 = 1011111000). See Figure 7.3.
Also, a threshold voltage of 10.5 V equates to 1101001000 in binary (10.5/0.0125 = 840 = 1101001000).

Set Threshold Voltage 1 to 10.5 V and Threshold Voltage 2 to 9.5 V. Check all responses from Threshold Voltage 1 are low and all from Threshold Voltage 2 are high.

Set Threshold Voltage 1 and 2 to 10.5. Check all responses are high.

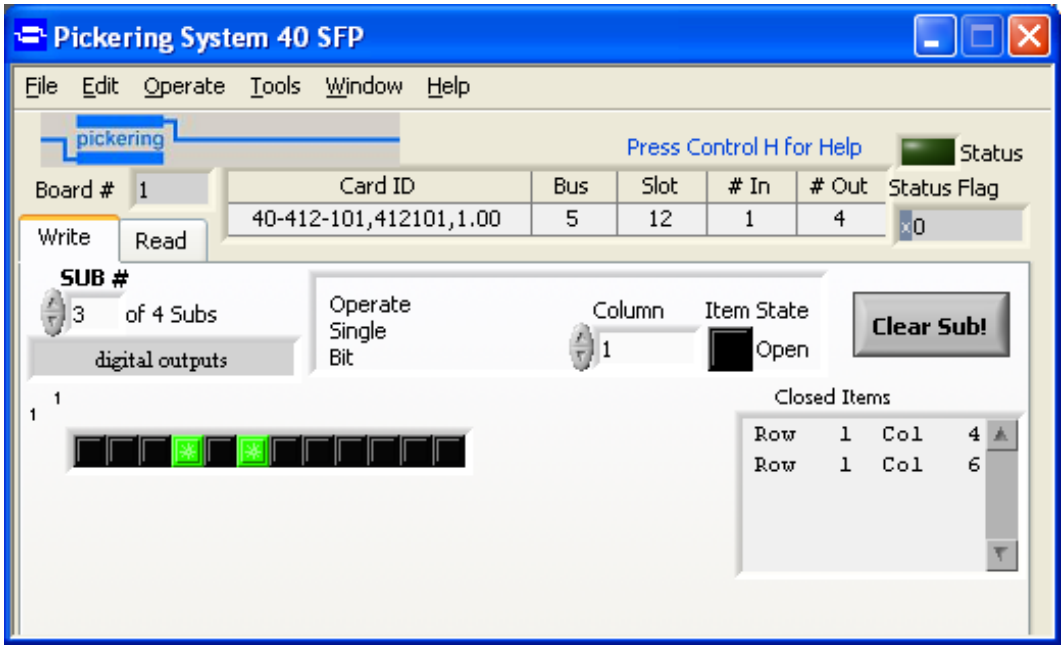

Figure 7.2 - Using Soft Front Panel To Set a Threshold of 0.5 V (101000 in Binary)

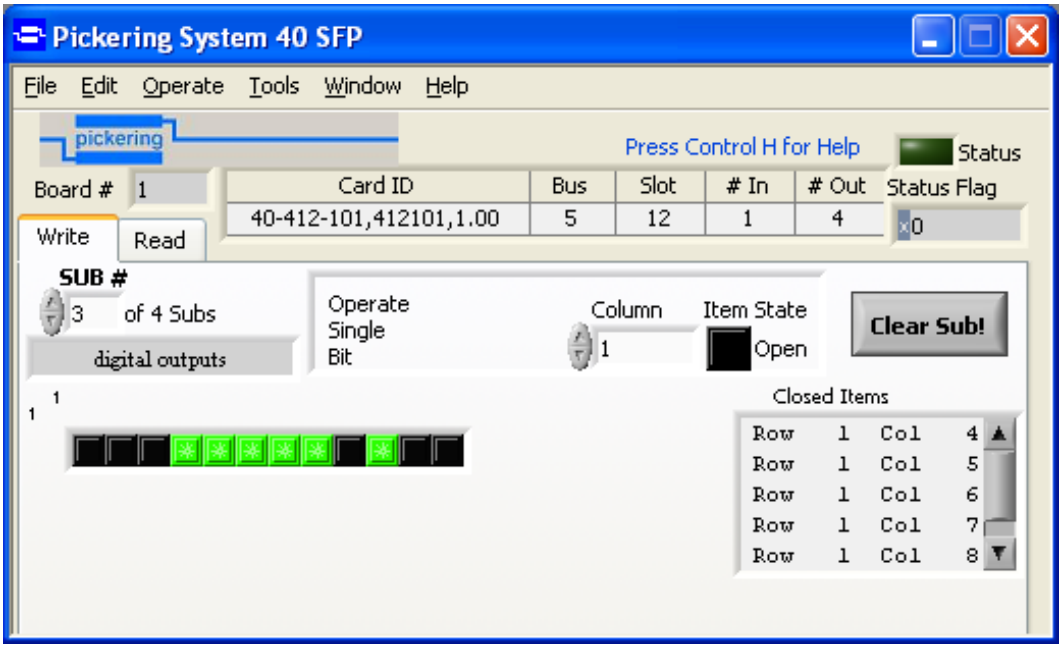

Figure 7.3 - Using Soft Front Panel To Set a Threshold of 9.5 V (1011111000 in Binary)

Output Driver Test

The following test checks the drivers are operational; it does not check the current capability of the drivers and uses the digital inputs to check that the output state has changed.

Set the voltage source to 20 V. The fixture potential divider output will now be 10 V. Set Threshold Voltage 1 to 9.5 V and Threshold Voltage 2 to 10.5 V.

With all drivers off check Threshold Voltage 1 responds high and Threshold Voltage 2 responds low.

Turn on Channel 1 high side driver, check that both thresholds respond high. Turn driver off.

Repeat for Channel 2 to 32 high side driver.

Turn Channel 1 lows side driver on, check that both thresholds respond low. Turn driver off.

Repeat for Channel 2 to 32 low side driver.

Pass/fail results can be recorded in the table on the following page.

Verification Test Results

The following table for the verification test results can be printed out for recording purposes.

Verification Test			
Module Number:	**41-412-101**	**Serial Number:**	
Date of Test:		**Operator's Name:**	
Test Equipment Used:			

Input Tests	
Test Name	**Result (delete as appropriate)**
0.5 V Threshold Test	Pass / Fail
9.5 V 10.5 V Threshold Test	Pass / Fail
10.5 V 9.5 V Threshold Test	Pass / Fail
10.5 V 10.5 V Threshold Test	Pass / Fail

Output Tests	
Test Name	**Result (delete as appropriate)**
Drivers off test	Pass / Fail
Channel 1 to 32 High Side Test	Pass / Fail
Channel 1 to 32 Low side Test	Pass / Fail

INPUT/OUTPUT LOOK-UP TABLES

The following tables cross-reference the 40-412-101 module's input and ouput signal to the physical devices on the PCB. This is for fault finding purposes and should be used in conjunction with the PCB layout diagrams in Figure 7.4 and 7.5. The ouput high-side and low-side drivers are fitted to the mother board, and the comparator devices for the inpust are fitted to the daughter board.

40-412-101 Daughter Board		
Input Signal	**Comparator No.**	**Comparator Pin No.**
Input 1	U17	5 & 7
Input 2		9 & 11
Input 3	U18	5 & 7
Input 4		9 & 11
Input 5	U19	5 & 7
Input 6		9 & 11
Input 7	U20	5 & 7
Input 8		9 & 11
Input 9	U21	5 & 7
Input 10		9 & 11
Input 11	U22	5 & 7
Input 12		9 & 11
Input 13	U23	5 & 7
Input 14		9 & 11
Input 15	U24	5 & 7
Input 16		9 & 11
Input 17	U25	5 & 7
Input 18		9 & 11
Input 19	U26	5 & 7
Input 20		9 & 11
Input 21	U27	5 & 7
Input 22		9 & 11
Input 23	U28	5 & 7
Input 24		9 & 11
Input 25	U29	5 & 7
Input 26		9 & 11
Input 27	U30	5 & 7
Input 28		9 & 11
Input 29	U31	5 & 7
Input 30		9 & 11
Input 31	U32	5 & 7
Input 32		9 & 11

40-412-101 Mother Board		
Output Signal	**High Side Driver**	**Low Side Driver**
Output 1	U26	U27
Output 2	U28	U29
Output 3	U30	U31
Output 4	U32	U33
Output 5	U34	U35
Output 6	U36	U37
Output 7	U38	U39
Output 8	U40	U41
Output 9	U42	U43
Output 10	U44	U45
Output 11	U46	U47
Output 12	U48	U49
Output 13	U50	U51
Output 14	U52	U53
Output 15	U54	U55
Output 16	U56	U57
Output 17	U58	U59
Output 18	U60	U61
Output 19	U62	U63
Output 20	U64	U65
Output 21	U66	U67
Output 22	U68	U69
Output 23	U70	U71
Output 24	U72	U73
Output 25	U74	U75
Output 26	U76	U77
Output 27	U78	U79
Output 28	U80	U81
Output 29	U82	U83
Output 30	U84	U85
Output 31	U86	U87
Output 32	U88	U89

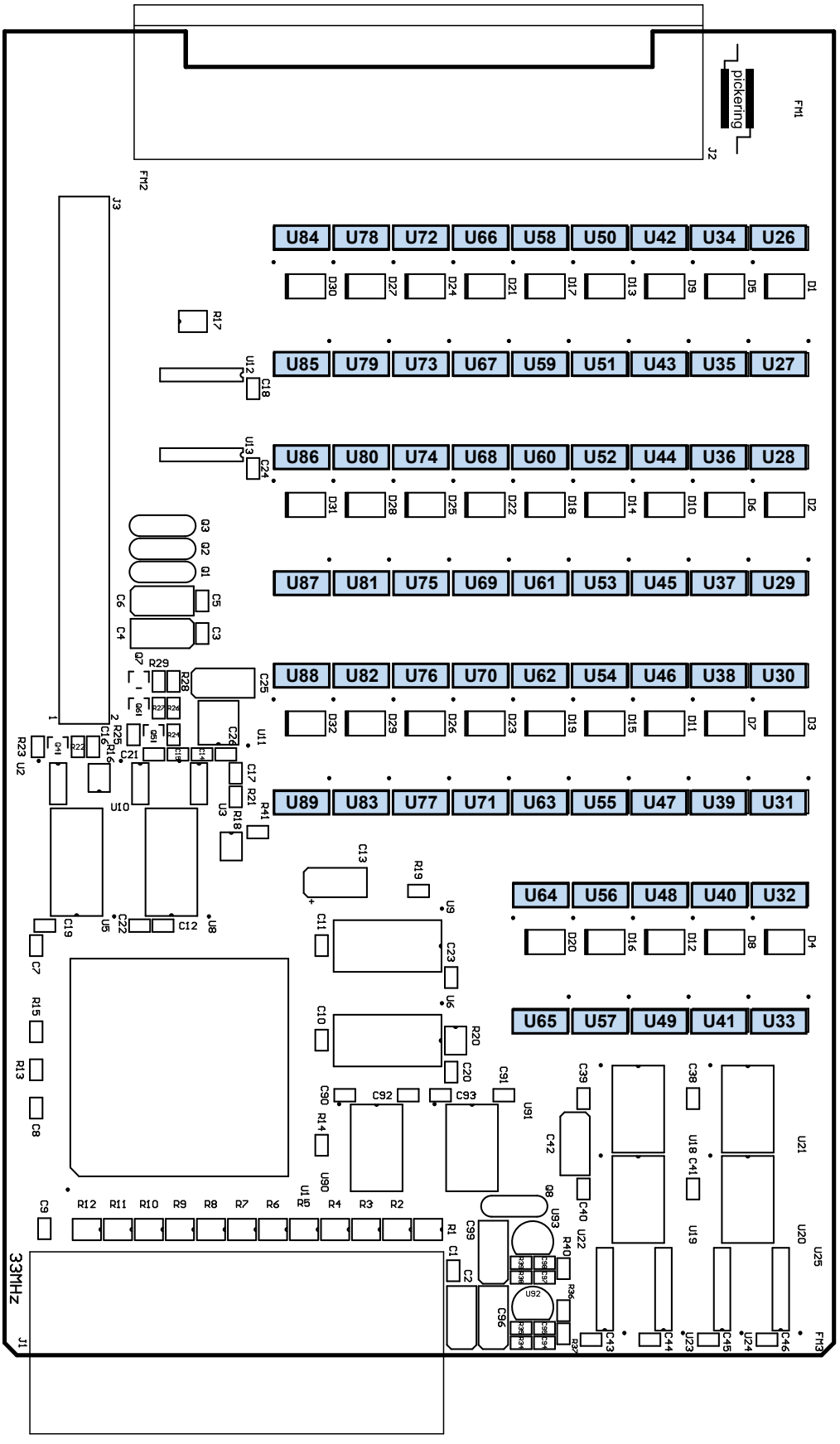
pickering
FM1
J2
FM2
J3
U84 U78 U72 U66 U58 U50 U42 U34 U26
U85 U79 U73 U67 U59 U51 U43 U35 U27
U86 U80 U74 U68 U60 U52 U44 U36 U28
U87 U81 U75 U69 U61 U53 U45 U37 U29
U88 U82 U76 U70 U62 U54 U46 U38 U30
U89 U83 U77 U71 U63 U55 U47 U39 U31
U64 U56 U48 U40 U32
U65 U57 U49 U41 U33
33MHz
J1
FM3

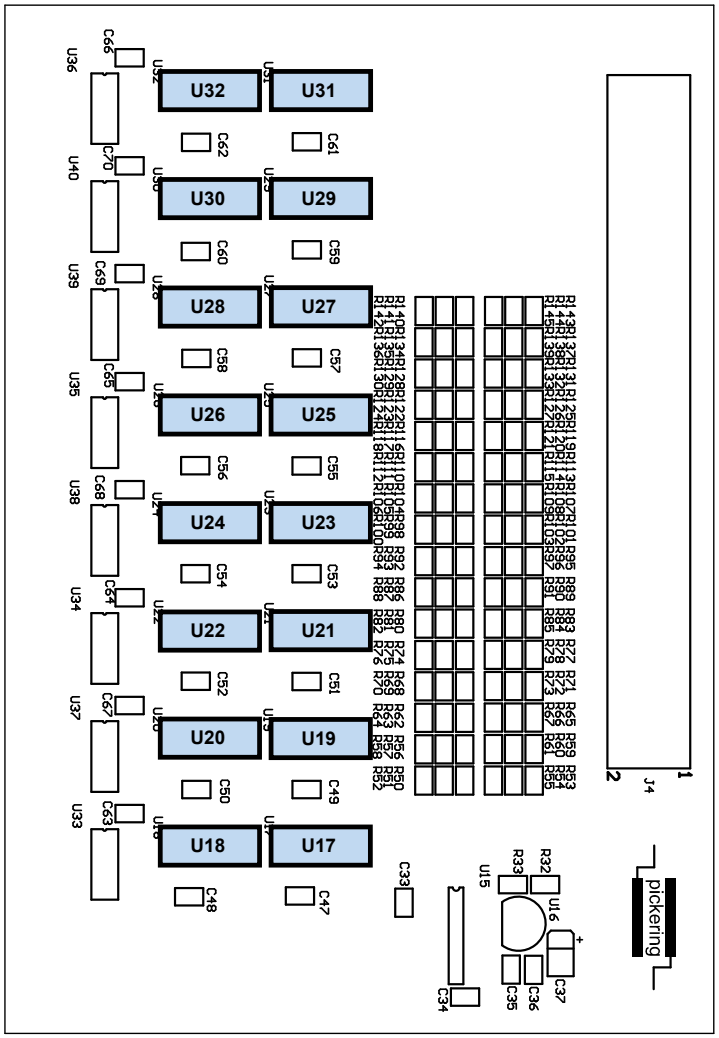

Figure 7.5 - 40-412-101 Daughter Board Component Layout