60-200 User Manual

LXI Remote AC Power Management Switch



© Copyright (2024) Pickering Interfaces. All Rights Reserved**.**

No part of this publication may be reproduced, transmitted, transcribed, translated or stored in any form, or by any means without the written permission of Pickering Interfaces.

Technical details contained within this publication are subject to change without notice.



FM38792

Technical Support

For Technical Support please contact Pickering Interfaces either by phone, the website or via e-mail.

Warranty

All products manufactured by Pickering Interfaces are warranted against defective materials and workmanship for a period of three years, excluding programmable power supplies, from the date of delivery to the original purchaser. Any product found to be defective within this period will, at the discretion of Pickering Interfaces be repaired or replaced.

Products serviced and repaired outside of the warranty period are warranted for ninety days.

Extended warranty and service are available. Please contact Pickering Interfaces by phone, the website or via e-mail.

Environmental Policy

Pickering Interfaces operates under an environmental management system similar to ISO 14001.

Pickering Interfaces strives to fulfil all relevant environmental laws and regulations and reduce wastes and releases to the environment. Pickering Interfaces aims to design and operate products in a way that protects the environment and the health and safety of its employees, customers and the public. Pickering Interfaces endeavours to develop and manufacture products that can be produced, distributed, used and recycled, or disposed of, in a safe and environmentally friendly manner.

Worldwide Technical Support and Product Information

Pickering Interfaces Headquarters

Stephenson Road, Clacton-on-Sea, CO15 4NL United Kingdom
Tel: +44 (0)1255-687900
e-mail: sales@pickeringtest.com

USA

Tel: +1 781 897 1710
e-mail: ussales@pickeringtest.com

France

Tel: +33 9 72 58 77 00
e-mail: frsales@pickeringtest.com

Germany

Tel: +49 89 125 953 160
e-mail: desales@pickeringtest.com

Sweden

Tel: +46 340-69 06 69
e-mail: ndsales@pickeringtest.com

Czech Republic

Tel: +420 558 987 613
e-mail: desales@pickeringtest.com

China

Tel: +86 4008 799 765
e-mail: chinasales@pickeringtest.com

Product Safety

Safety Symbols

The following safety symbols may be used on the product and throughout the product documentation.

Meaning/Description	Symbol
PROTECTIVE EARTH (GROUND) To identify any terminal which is intended for connection to an external conductor for protection against electric shock in case of a fault, or the terminal of a protective earth (ground) electrode.	
DANGEROUS VOLTAGE To indicate hazards arising from dangerous voltages.	
WARNING/CAUTION An appropriate safety instruction should be followed or caution to a potential hazard exists. Refer to the relevant instructions detailed within the product manual.	
HEAVY If this product is heavy reference should be made to the safety instructions for provisions of lifting and moving.	
STATIC SENSITIVE To indicate that static sensitive devices are present and handling precautions should be followed.	

Contents

Copyright Statement ..... (ii)

Technical Support and Warranty ..... (iii)

Product Safety ..... (iv)

Contents (this page) ..... (v)

Warnings and Cautions ..... (vi)

Section 1

Technical Specification 1.1

Section 2

Technical Description 2.1

- Functional Description 2.1

Section 3

Installation 3.1

- Pre Operation Checks 3.1
- Hardware Installation 3.1
- Setting the IP Address 3.2
- Installing the Software 3.3
- Using the Power Management Switch 3.3
- Soft Front Panel Operation 3.3

Section 4

Programming Guide 4.1

- Programming Options 4.1
- Relay Cycle Counting Feature Details 4.1
- Sequence Service and Triggering 4.1
- Drivers 4.2
- General Methodology 4.3
- Communication Library Functions 4.3
- Specific Functions 4.4
- C Interface Library 4.5
- Visual Basic 4.5
- LabVIEW Interface Library 4.7
- IVI-COM Interface Library 4.8

Section 5

Connections 5.1

- External Functional Stop Connector Wiring 5.2

Section 6

Troubleshooting 6.1

- LXI Status Indicators 6.1
- LAN Reset 6.2

Appendix A

Fitting Rack Mounting Flanges A.1

Warnings & Cautions

WARNING - Hazardous Environments	Symbol
This product is not specifically designed for use in hazardous environments, for example in explosive atmospheres. If the product is to be used in hazardous environments we recommend that the user ensures suitable protective measures are taken.	

WARNING - Danger of Electric Shock	Symbol
This unit may contain hazardous voltages. Before removing the unit from the rack remove all supplies and disconnect user I/O signals.	

CAUTION - Handling of Electrostatic-Sensitive Devices	Symbol
Certain semiconductor devices used in this equipment are liable to damage due to static voltage. Observe the following precautions when handling these devices in their unterminated state, or sub-assemblies containing these devices: • Persons removing sub-assemblies from equipment using these devices must be earthed by a wrist strap and a resistor at the point provided on the equipment. • Soldering irons used during the repair operations must be low voltage types with earthed tips and isolated from the mains voltage by a double insulated transformer. • Outer clothing worn must be unable to generate static charges. • Printed Circuit Boards (PCBs) fitted with these devices must be stored and transported in anti-static bags.	

CAUTION - Product Documentation	Symbol
Suitably qualified & trained users should ensure that the accompanying documentation is fully read and understood before attempting to install or operate the product.	

Safety Instructions

Safety Instructions
All cleaning and servicing requires the equipment to be isolated and disconnected from the power source and user I/O signals (refer to the Maintenance Section). • Appropriate manual handling procedures should be followed as dictated by the weight of the individual module or the combined weight of the modules & chassis. • Should a fault occur with the module or chassis, immediately isolate and disconnect the incoming power to the chassis and the user I/O signals. • Ensure the equipment is installed, operated and maintained by trained and authorised personnel. • For suitably equipped products in the event of an emergency press the red "emergency stop" button situated on the front of the unit.

Warnings & Cautions



WARNING - RACK MOUNTING

If it is required to fit this unit into a 19 inch rack, its weight must be supported by side brackets, runners or a suitable equipment shelf.

The fixing holes in the front panel flanges are designed only for securing the device in the rack and must NOT be used to support the weight of the whole device.

Please refer to Appendix A for the procedure for fitting the supplied flanges to either side of the front panel.

Section 1 - Technical Specification



- Provides Controlled Start Up Of Test Systems
- Supports Up To 8 Instruments
- Settable Timing Interval And Sequence
- Permits Remote Re-booting Of Systems
- Built-In Scan List Sequence Stores With Triggering Capability
- Relay Cycle Counting Included
- Compliant To LXI Standard 1.4
- Provides Functional Stop Facility
- 3 Year Warranty

If you have ever read the term "Programmable except for the supply on/off switch" the 60-200 can provide this capability with the added benefit of an easy to use LXI interface. The 60-200 is a power management switch that provides a means of remotely controlling the power status of up to 8 instruments.

Each power outlet can be programmed to switch on in sequence with a specific timing delay. The delay can be staggered to ensure that order dependent systems - like PXI - can be switched on and off in an orderly way with just one operation. A staggered start up also limits the inrush current associated with the powering up of equipment, including earth current inrush, placing less stress on cabling and leakage breakers. Power on or off instructions can be initiated from either the front panel switch or via the LXI compliant LAN interface.

By using switching devices with high inrush current ratings, the 60-200 can tolerate equipment that includes EMC power filters.

For systems not requiring remote control, the 60-200 will operate without a LAN connection and power sequencing will be according to stored instructions. However, a LAN connection is required to configure the 60-200 and set the order and timing of the start up sequence.

Remote control can be used to re-boot systems that are present in other buildings or factories. The 60-200 is designed in accordance with the LXI Standard 1.4 and is supplied in a compact 1U high, rack width case.

An RS232 controlled version of the 60-200, the 90-200, is also available without LAN access and with reduced functionality.

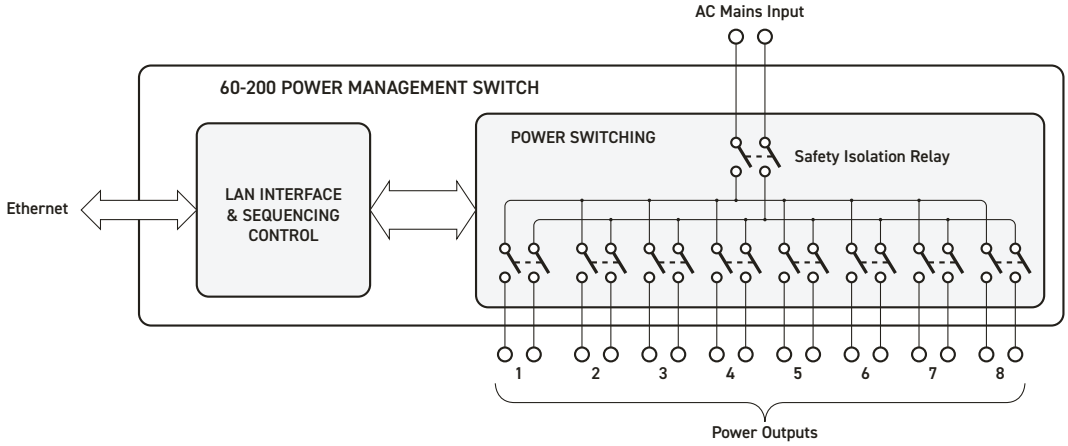

Functional Diagram for the 60-200 LXI Remote AC Power Management Switch

Sequencing Service and Triggering

The Sequencing service provides the user with the ability to set a series of pre-determined sequences on an LXI unit. These sequences can be triggered by software or one of the sixteen software configurable open collector triggers.

As the operations are grouped together, it will minimize the number of control transactions required to achieve a composite change of target switch state, condensing multiple operations in a single sub-unit into a single operation, thus reducing the overall system switch settling time.

For example, if a user wants to operate the crosspoints of a matrix - X1-Y1, X4-Y1, X2-Y2, in the first sequence, only one operation, and one delay, will be used.

Additionally, as the switch state sequences are stored within the LXI controller, the burden on the Host CPU and Ethernet traffic is greatly reduced, and so the overall system latency is also reduced.

This unit features a software reset line which provides the ability for a user supplied reset to be applied to the unit, triggering a software reset of the relays, returning all relays in the unit to their default state. There is also a software fault line available that will be triggered if there is any error detected within the unit. Please note that while these reset and fault lines use dedicated physical connections to the unit, they are software control lines and as such should not be used for safety interlocks etc.

For more information on the Pickering Sequence Manager please refer to our website.

Relay Cycle Counting

To aid with "health" monitoring this unit is provided with a relay cycle counting feature. The number of operations per contact are stored on the unit and can be used to determine if a relay is approaching EOL. This information could allow system connections to be revised so that signals applied to heavily used contacts are swapped with lightly used contacts to prolong the working life of the relay(s).

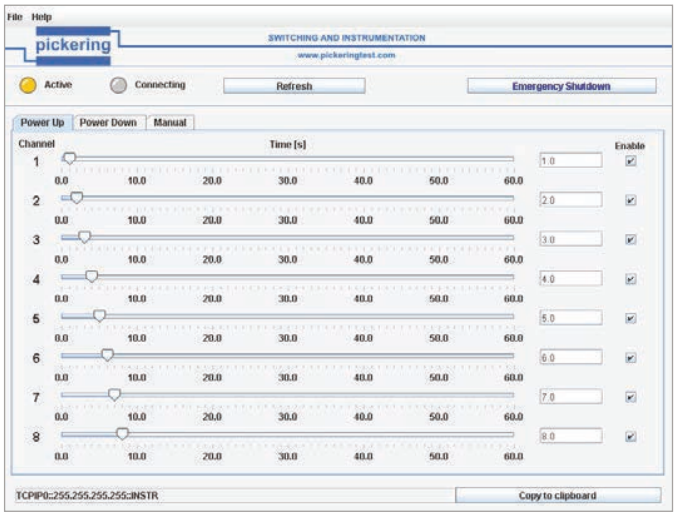

60-200 LXI Power Management Switch
Soft Front Panel (Power-Up Sequence Control)

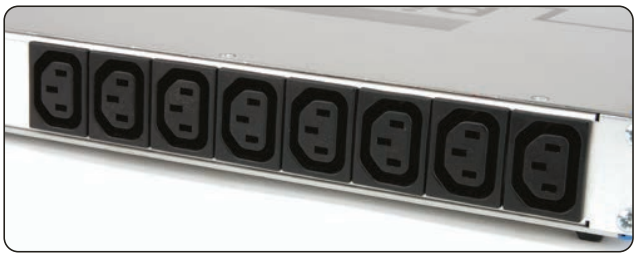

60-200 Rear Mounted Power Outputs

Section 1 - Technical Specification

Specifications

Power Connections	
No. of power inlets:	1, male IEC connector
Power inlet current:	10 A
No. of power outlets:	8, female IEC connectors
Outlet current rating:	6 A maximum per channel, 10 A maximum total current for all channels.
Switch Ratings	
Switch configuration:	DPST each outlet
Electrical life:	100,000 operations of a load incorporating EMC filters on its AC input.
Sequencing Control	
ON/OFF initiation:	From front panel switch or remotely via either web browser or using one of a variety of provided programming interfaces.
Timing:	Output delays can be set from 0 to 60 seconds for each outlet, set via web interface. Timing sequence is stored in non-volatile memory once set.
Functional shutdown:	Connector on front panel can be used to connect directly to a remote functional shut down switch. Switch action is immediate on all outlets.

Mechanical Characteristics

3D models for all versions in a variety of popular file formats are available on request.

Operating/Storage Conditions

Operating Temperature:	0 °C to +55 °C
Humidity:	Up to 95% non-condensing
Altitude:	4000 m
Storage/Transport Temperature:	-20 °C to +75 °C
Humidity:	Up to 95% non-condensing
Altitude:	15000 m

General Characteristics

Power Source:	Universal AC mains supply, 90 to 264 10 A VAC, 50/60 Hz.
LXI Interface:	1000Base-T Ethernet Interface via a standard RJ-45 connector mounted on the rear panel.* Compliant to LXI Standard 1.4.
LXI Status Indicators:	Front panel mounted LEDs: • Power • Ready • Error • LAN • Active
Rack Mounting:	Supplied with front panel ears to enable rack mounting on a shelf or other rear support mechanism.
Dimensions:	Full 19" rack width, 1U high, 340 mm depth. Weight: 5 Kg.
Cooling:	Fan assisted, side entry, rear exhaust.

*Note: Legacy units may not have 1000Base-T support.

Scan List Sequencing

Capable of storing 5000 predefined test sequences, loaded from the host Controller to the LXI unit at process initialization, with the ability to be triggered through software or from any of the sixteen software configurable triggers.
For more information on the Pickering Sequence Manager, please go to: pickering-sequence-manager

Triggering

- 16x Software Configurable Bidirectional Open Drain Triggers
- 1x Dedicated Software Reset Line
- 1x Dedicated Software Fault Line
- 1x Dedicated Interlock Line

Sequencing/Triggering port: 25-pin male micro-D connector mounted on the rear panel.

Safety & CE Compliance

All products are fully CE compliant and meet applicable EU directives:

Low-voltage safety EN61010-1:2010,
EMC Immunity EN61326-1:2013,
Emissions EN55011:2009+A1:2010.

Product Order Codes

LXI Remote AC Power Management Switch	60-200-001

Product Customization

Pickering LXI units are designed and manufactured on our own flexible manufacturing lines, giving complete product control and enabling simple customization to meet very specific requirements.

All customized products are given a unique part number, fully documented and may be ordered at any time in the future. Please contact your local sales office to discuss.

Section 2 - Technical Description

Functional Description

The 60-200 consists of a main PCB, a power supply module and an embedded controller PCB mounted in a 1U rack chassis with the connectors and switches mounted on the front and rear panels. The main PCB contains the power relays, relay drivers and a PIC microcontroller used to control the unit's operation. The PIC sends data to, and receives data from the Embedded Controller PCB via it's serial interface. The Embedded Controller provides the LAN interface via the RJ45 socket on the rear panel and runs the Ethernet protocol required for remote operation. It also stores the data sheet, manual and driver software for the unit as well as hosting the LXI instrument home page which is accessible using a web browser.

The Power Management Switch can be controlled by a Soft Front Panel which is run as a Java applet from the Instrument Homepage and provides a straightforward graphical means of setting power on and off delays for each channel. Also the unit can be programmed via one of a number of drivers that are supplied with the unit. Once power-up and power-down sequences have been set they can be invoked from the Soft Front Panel, or via the appropriate control command, or manually using the Start/Stop push button mounted on the front panel.

The microcontroller switches the power relays for each channel via relay driver circuitry and also drives 8 LEDs on the front panel that indicate which channel is active. Voltage sense signals are connected to the output of each power relay so the presence of voltage on the channels can be detected. The microcontroller reads these inputs via an optically isolated interface.

Power to all the channel relays is fed from the fused mains input connector via an isolation relay. Control of this relay is either from the microcontroller using the appropriate command, or by using the front panel mounted Functional Stop button. The operation of this button interrupts the feed to the isolation relay's coil and therefore disables the power routed through all active channels. The button mechanically latches and requires a twisting action to re-enable power to the channels. Additionally, an external functional stop can be fitted using the 7-pin DIN connector on the front panel. The wiring for this connector is outline in Section 5 and it operates in the same way as the Functional Stop button on the front panel. There is also the facility for LED illumination of the external button - the LED remains lit as long as power is applied to the 60-200.

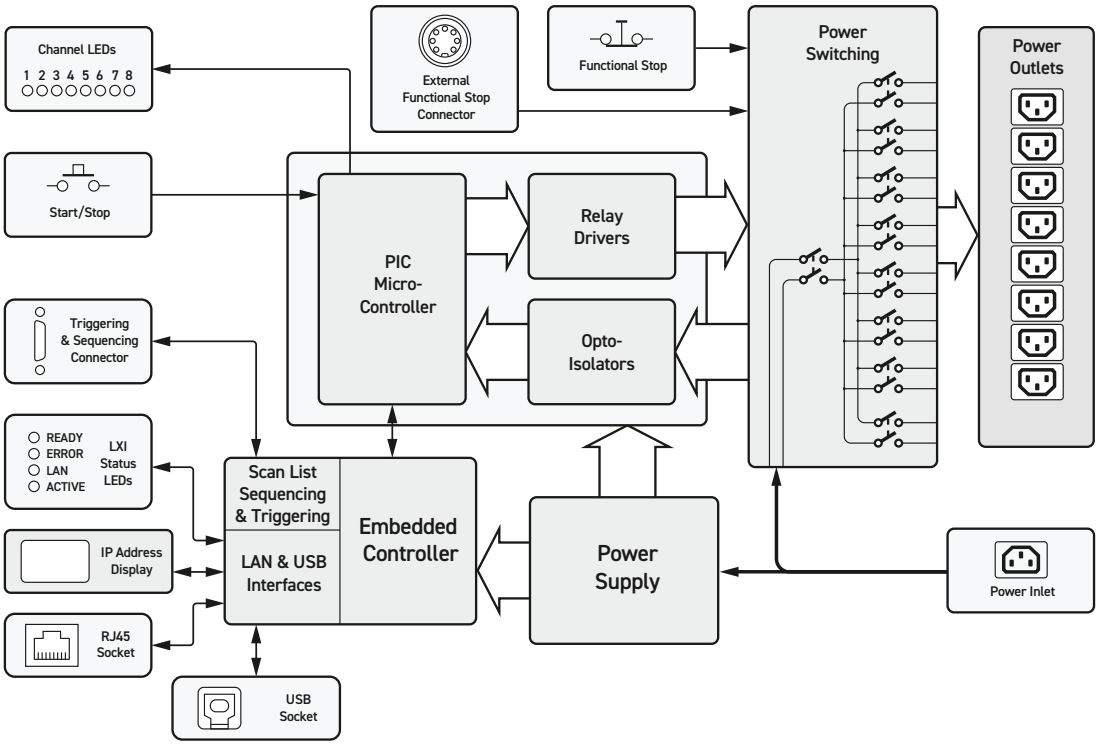

Figure 2-1. Block Diagram for the 60-200 Power Management Switch

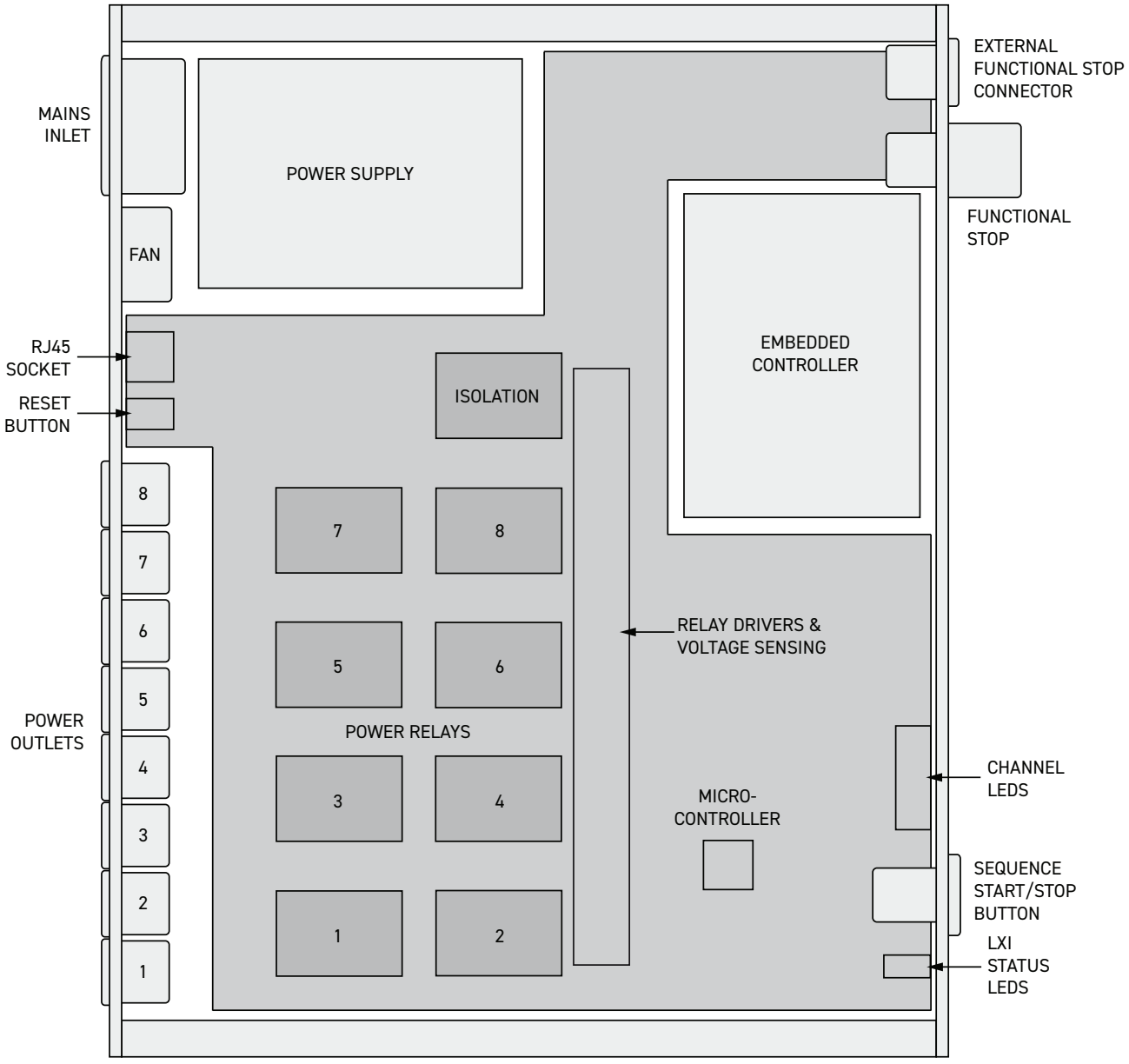

Figure 2-2. Chassis Layout for the 60-200 Power Management Switch

Section 3 - Installation

Refer to the Warnings and Cautions at the front of this manual

The module is designed for indoor use only.

Pre-operation Checks (Unpacking)

1. Check the module for transport damage and report any damage immediately to Pickering Interfaces. Do not attempt to install the product if any damage is evident.
2. Ensure that the designated area for the product is of flat and solid construction to support its weight.

Installing the Power Management Switch

The 60-200 may be mounted on a desk top or fitted into a standard 19 inch rack. (rack mounting flanges are supplied with the unit that can be fitted to the sides of the front panel). ***When fitting into a rack it is important to provide adequate support using side brackets or runners, the mounting holes in the front panel flanges are designed only for securing the unit in the rack and must NOT be used to support the weight of the whole unit.***

When positioning the 60-200, make sure that there is adequate clearance at the rear of the unit to allow unrestricted air flow through the cooling fan and to enable the operation of the power on/off switch and the Reset button. The rear panel layout is shown below.

Power is supplied to the rear of the unit using a standard IEC power lead. Up to 8 devices can be connected to the power management switch using the IEC power outlet sockets on the rear panel. The maximum current rating for any one output is 6 A, the total current for all outputs must not exceed 10 A.

If required, an external Functional Stop button can be fitted to the 7-pin DIN socket on the front panel. The wiring for this is shown in Section 5.

The Power Management Switch is controlled by the host computer via an Ethernet interface. The RJ45 socket on the rear of the unit can be connected to a hub or switch via an Ethernet cable to allow control over a local area or wide area network. Alternatively a crossover Ethernet cable can be used to connect the unit to a laptop PC and local control can be carried out isolated from a network. The IP address of the unit has to be manually or automatically configured before it can be used on a network, please refer to the following section “Setting the IP Address” and the “LXI Getting Started Guide” document to carry out his process.



Figure 3-1. Rear view of the Power Management Switch showing the mains supply connection, the 8 power outputs, LAN socket and cooling fan

Setting the IP Address

To use the 60-200 Power Management Switch over a LAN connection it should be set up and configured as described in the "LXI Getting Started Guide" document.

If the IP address is to be set manually and before connecting to a network, contact your IT department so they can give you the correct settings for:

- IP Address
- Subnet Mask
- Default Gateway
- DNS Server(s)

Once you have the required information, the IP configuration window is used to manually set the IP address. This is shown in Figure 3-2.

The current IP address setting of the 60-891-048 is indicated on a display on the rear panel of the chassis.

Incorrect setting will result in a loss of communication and may also be indicated by a red LAN LED on the front panel. If this does occur press and hold the LAN Reset button on the back panel of the device for a full factory reset (see Section 6 "Troubleshooting" for details).

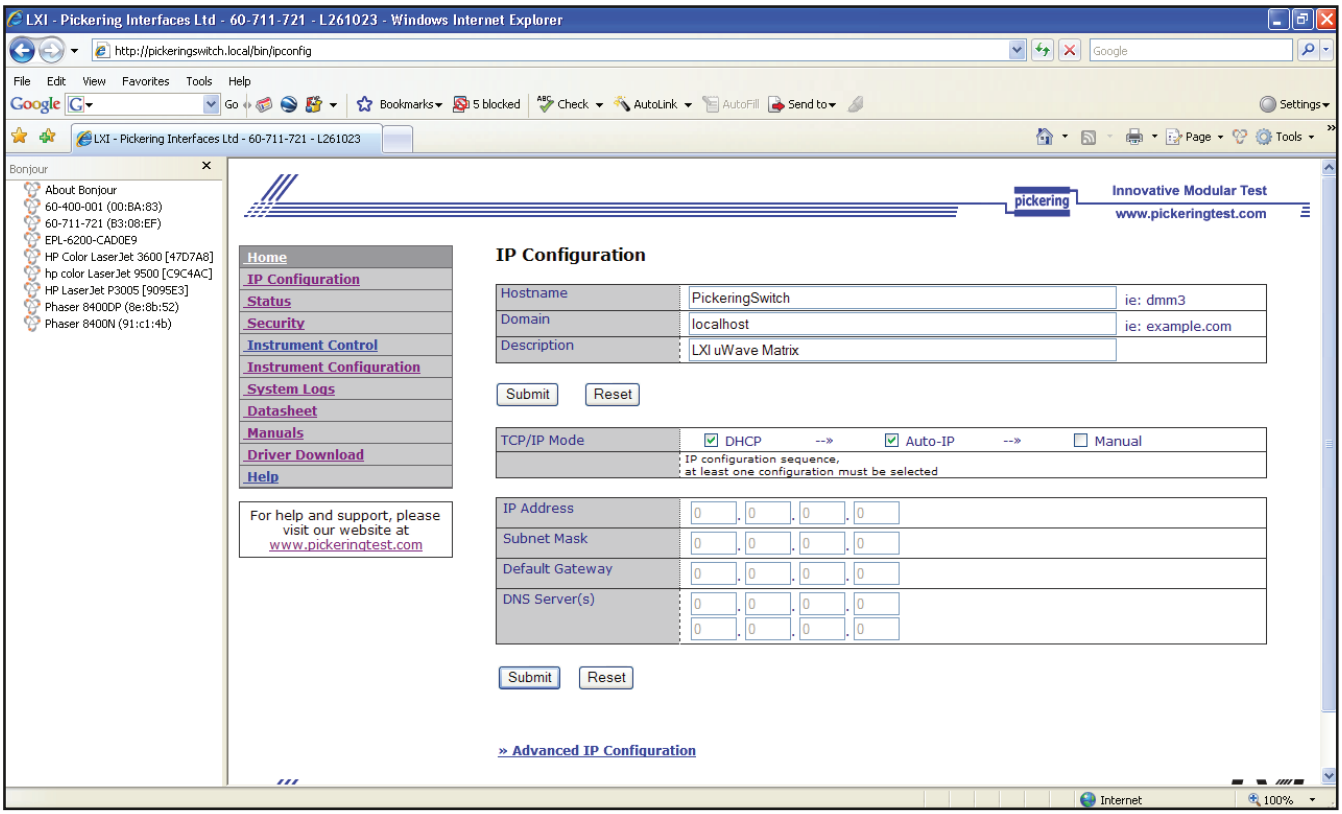

Figure 3-2. Example configuration window used to manually set the IP address of a Pickering LXI device

Installing the Software

From the device web page, select 'Driver Download' from the menu at the left of the page. This will retrieve the driver from the instrument and install it on your PC.

Alternatively, the driver may be found on the DVD shipped with the product in the 'Drivers_LXI' folder:
Series-60-Setup.exe.

This driver may also be found on the Pickering Interfaces web-site at:
pickeringtest.info/downloads/drivers/Sys60/

or from the Software Downloads section at:
pickeringtest.com

Using the Power Management Switch

Once communication to the Power Management Switch has been established the Instrument Home Page can be accessed using a web browser. From this page, data sheets, manuals and drivers can be downloaded to allow the user to set up and control the Power Management Switch. A Soft Front Panel can be downloaded and run as a Java applet which allows easy graphical set up and control of the unit.

From the host computer, the Power Management Switch can be programmed with power on and power off delays for each channel. When set, a power up or power down sequence can be invoked using the appropriate command or by pressing the Sequence Start/Stop button on the front panel.

The Functional Stop button, when pressed, immediately cuts the power to all channels regardless of any command or sequence that is being executed. The power remains disabled to the channels until the button is released, this is achieved by rotating the plunger clockwise.

Soft Front Panel Operation

The 60-200 Power Management Switch can be programmed using the Soft Front Panel. This can be run as a Java Applet from the device's LXI home page. You must have the Java Runtime environment loaded from the Oracle Corporation to use this facility. This application can be downloaded from www.java.com.

To access the Soft Front Panel, first select *Instrument Control* from the Instrument Home Page, then click the relevant icon in the displayed window to launch the Java applet.

Section 4 - Programming

Programming Options for Pickering Interfaces LXI Units

For information on the installation and use of drivers and the programming of Pickering's products in various software environments, please refer to the Software User Manual.

This is available as a download from:
pickeringtest.com/support/software-drivers-and-downloads

Also, it can be accessed from the DVD supplied with the product:
<DVD_DRIVE>\downloads\Documentation\Software-Manual.pdf

Relay Cycle Counting Feature Details

For information related to the relay cycle counting feature present on this product, please refer to the Relay Cycle Counting User Guide.

This is available as a download from:
pickeringtest.com/portal/web/256/content/private/manuals/Relay-Cycle-Counting-User-Guide.pdf

Also, it can be accessed from the DVD supplied with the product:
<DVD_DRIVE>\downloads\Documentation\Relay-Cycle-Counting-User-Guide.pdf

Sequence Service and Triggering

For a description of the Sequencing Service and Triggering function as well information on the DIO/Trigger port, please refer to the Pickering Sequence Manager Getting Started Guide.

This can be downloaded via the web page:
https://www.pickeringtest.com/kb/software-topics/pickering-sequence-manager

Programming the Power Management Switch

The 60-200 Power Management Switch can be programmed using the supplied Soft Front Panel. This can be run as a Java Applet from the devices LXI home page. An example of this is shown in Figure 4.1.

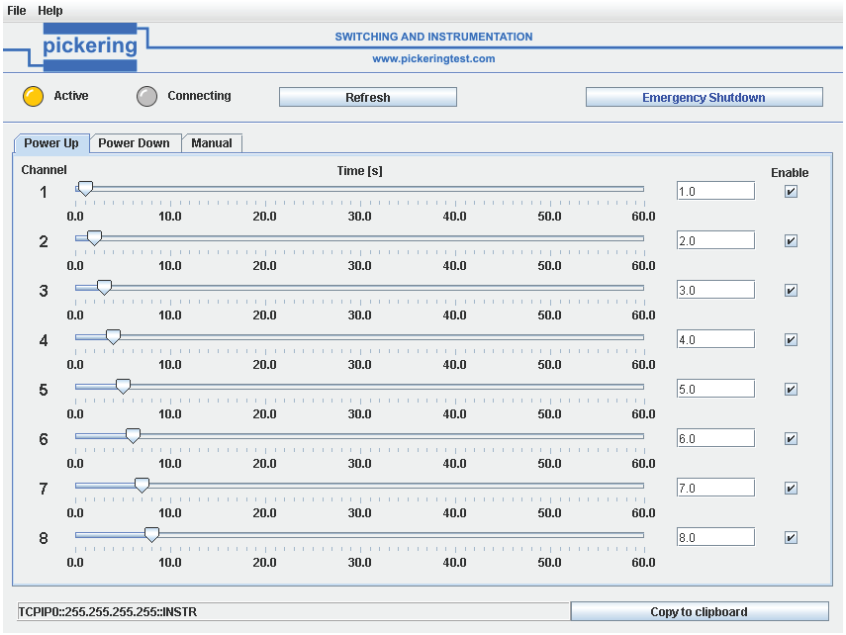

Figure 4-1. The Soft Front Panel for the 60-200 Power Management Switch (Power up Sequence Control Screen)

Drivers

The Power Management Switch comes with a number of programming interfaces and wrappers:

- C interface basic driver
- IVI-COM driver
- IVI-C driver
- LabView driver

Further details of these drivers are included on the following pages.

A good source of information can be found in the IVI Foundation's Getting Started Guide which may be found on the Pickering distribution disk in "\Programming\IVI_GSG_v_1.0.pdf".

Since the operation of each function is near identical in each driver, in this section we describe the operation of each function with no regard to implementation for any given interface. Later sections show how to use these functions in particular environments.

No attempt is made here to provide full details of these drivers, the user should refer to the documentation included in the installer packages, many of which are also available on the Pickering CD and the Pickering web site at pickeringtest.com.

Since the Pickering LXI range covers a variety of different chassis types and card types, the driver is split into a number of parts, each dedicated to a particular type of operation. As far as the Power Management Switch is concerned, there are two parts to the driver: one, which is common to all Pickering LXI chassis, for establishing communication; the other for functionality specific to the Power Management Switch.

General Methodology

The general method required to operate a card in the Pickering LXI model is this:

1. Locate the LXI device
2. Establish a driver session to the LXI unit
3. Open the required card for access
4. Operate card specific functions
5. Close card
6. Close session

Failure to follow this programming model may result in a number of difficulties including the inability to locate an LXI unit or a card within an LXI unit.

Communication Library Functions

This library is common to all Pickering LXI devices, it is used to locate and establish a basic communications link from the client application to the LXI device. It is not used to control any cards, for that the appropriate card specific library must be used.

a) Basic Connection

`Connect`	Establish communication with a Pickering LXI unit
`Disconnect`	Terminate communication with a Pickering LXI unit

b) Discovery

`EchoBroadcast`	Send a broadcast message to all LXI units in current subnet
`EchoBroadcastTest`	(Not available)
`GetAvailableLXICount`	Returns count of available LXIs
`GetAvailableLXIEntry`	Receive information about LXI by index
`EchoDirect`	Send a direct inquiry to a LXI for getting information

c) Error Handling

`GetLastErrorCode`	Returns last error code
`GetLastErrorMessage`	Returns last error as a message
`ErrorCodeToMessage`	Convert error code to a message
`IsError`	Returns TRUE if an error occurred

d) Information

`GetVersion`	Returns the version of library
`SbVersion`	Returns the version of ServerBridge on LXI device
`SbReset`	Function is not yet implemented
`SbInfo`	Returns information about LXI device type
`GetCountCardType`	Returns count of cards by card type

e) Resource Management

`DeviceLock`	Locks the LXI device so that no other client can open card(s)
`DeviceUnlock`	Releases the lock

Power Management Switch Specific Functions

This library provides functions specific to the Power Management Switch unit. It permits the user to define the delay time of each relay, to enable or disable a relay from the sequence, and to operate a switch immediately.

a) Error Handling

`GetLastErrorCode`	Returns last occured error code
`GetLastErrorMessage`	Returns last occured error as a message
`ErrorCodeToMessage`	Convert error code to a message
`IsError`	Returns TRUE if an error occurred

b) Version Information

`GetVersion`	Returns the version of the library

c) Basic Open/Close

`Open`	Opens power sequencer session, full access
`OpenForRead`	Opens power sequencer session, read only
`Close`	Closes the power sequencer session

d) Switch Operation

`GetChanState`	Gets ON/OFF state of a specified channel
`SetChanState`	Sets ON/OFF state of a specified channel
`GetChanTime`	Gets the up or down sequence time for a specified channel.
`SetChanTime`	Sets the up or down sequence time for a specified channel.
`GetChanEnabled`	Retrieves information if channel is or isn't in sequence.
`SetChanEnabled`	Sets a channel to be in or out of the sequence
`ChanTest`	Tests all channels. Returns an array of channel indexes which have a hardware problem
`Sequence`	Start an up or down sequence
`SettleTime`	Get settling time for all relays
`Shutdown`	Shut down power sequencer, no sequence times applied
`GetChanCount`	Get count of power sequencer channels

C Interface Library - C++

The user should refer to the header files for the details of the function declarations.
Below is an example using Microsoft Visual C++.

```
// Establish communication session to LXI device at
// specified IP address
SESSION session;
PICMLX_Connect(0, “192.168.1.114”, 1024, 2000, &session);
// Open power sequencer object for access
PIPSLX_Open(session);
// Trigger a power-up sequence
PIPSLX_Sequence(session, SEQUENCE_START);
/*
..
..
      Additional code goes in here
..
..
*/
// Then a power-down sequence
PIPSLX_Sequence(session, SEQUENCE_STOP);
//
PIPSLX_Close(session);
PICMLX_Disconnect(session);
```

Visual Basic

Access to the 60-200 is provided via two standard DLL's “Picmlx_w32.dll” and “Pipslx_w32.dll” usually found in the \ windows\system32 folder. VB declare statements are used to gain access to the functions within these DLL's, see the example below. A file containing a full list of these can be found in the VB example code. Please note the example below uses Visual Studio 2005 and the following changes would be required for:

- Visual Studio 2003 - alter all UInt32 definitions to Int32
- VB6 - alter all UInt32 definitions to long
- VBA - alter all Uint32 definitions to long

```
'put these lines in a module or class
    Declare Function PICMLX_Connect Lib "Picmlx_w32.dll" Alias "_PICMLX_Connect@20" (ByVal
Board As UInt32, ByVal Address As String, ByVal Port As UInt32, ByVal Timeout As UInt32,
ByRef SID As UInt32) As UInt32
    Declare Function PICMLX_Disconnect Lib "Picmlx_w32.dll" Alias "_PICMLX_Disconnect@4"
(ByVal SID As UInt32) As UInt32


    Declare Function PIPSLX_Open Lib "Pipslx_w32.dll" Alias "_PIPSLX_Open@4" (ByVal SID As
UInt32) As UInt32
    Declare Function PIPSLX_Close Lib "Pipslx_w32.dll" Alias "_PIPSLX_Close@4" (ByVal SID
As UInt32) As UInt32
    Declare Function PIPSLX_GetChanState Lib "Pipslx_w32.dll" Alias "_PIPSLX_
GetChanState@12" (ByVal SID As UInt32, ByVal Chan As UInt32, ByRef State As Boolean) As
UInt32
    Declare Function PIPSLX_SetChanState Lib "Pipslx_w32.dll" Alias "_PIPSLX_
SetChanState@12" (ByVal SID As UInt32, ByVal Chan As UInt32, ByVal State As Boolean) As
UInt32


Public Const UpSequence = 1
Public Const DownSequence = 0


'put these lines in a method or function

        Dim lSess As UInt32
        Dim lRetCode As UInt32
        Dim lChan As UInt32


        ' Establish communication session to LXI device at
        ' specified IP address 192.168.1.80, TCP port 1024, timeout 2 seconds
        lRetCode = PICMLX_Connect(0, "192.168.1.80", 1024, 2000, lSess)


        ' *** Open the power sequencer for full access ***
        lRetCode = PIPSLX_Open(lSess)


        ' *** Immediate control of channel 1 (replace this with your own code)***
        lChan = 1
        'get the current state of the channel into lState
        lRetCode = PIPSLX_GetChanState(lSess, lChan, lState)


        'close the DPST switch (connect channel to input power)
        lRetCode = PIPSLX_SetChanState(lSess, lChan, True)


        'open the DPST switch (disconnect channel to input power)
        lRetCode = PIPSLX_SetChanState(lSess, lChan, False)


        ' *** Close the power sequencer (release for use by other applications)***
        PIPSLX_Close(lSess)


        ' *** Close communication with the LXI device
        If lSess <> 0 Then PICMLX_Disconnect(lSess)
```

LabVIEW Interface Library

In the example below the following steps are carried out:

1. A session connection is established with the LXI device at IP address 192.168.1.80.
2. The power sequencer is opened for full access.
3. The channel up sequence is started (this will cause all enabled channels to close at their programmed time).
4. The channel down sequence is started (this will cause all enabled channels to open at their programmed time).
5. The power sequencer is closed and released for use by other applications.
6. Communication with the LXI device is closed.

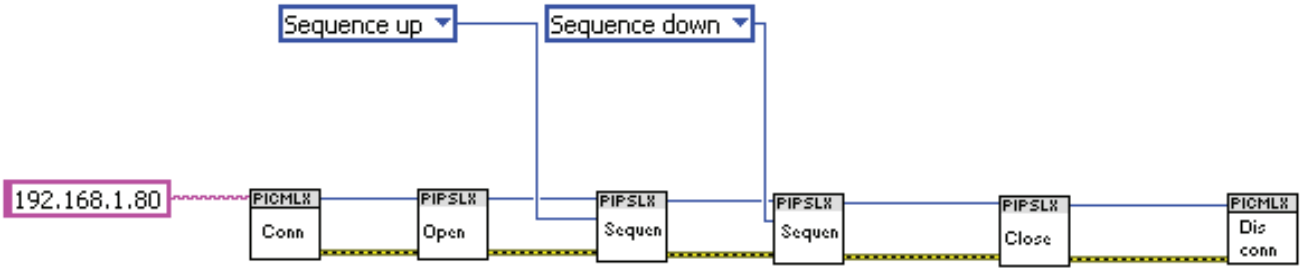

Figure 4-2. Using LabVIEW to control the Power Management Switch

IVI-COM Interface Library

Full documentation of this library is included in the installation folder, normally C:\Program Files\IVI\Drivers\PiPwrSeq.

Below is an example of it's use in Agilent VEE.

In this example, an instance of a PiPwrSeq object is created and then initialised to the required IP address. A power-up sequence is called and then the power sequencer closed.

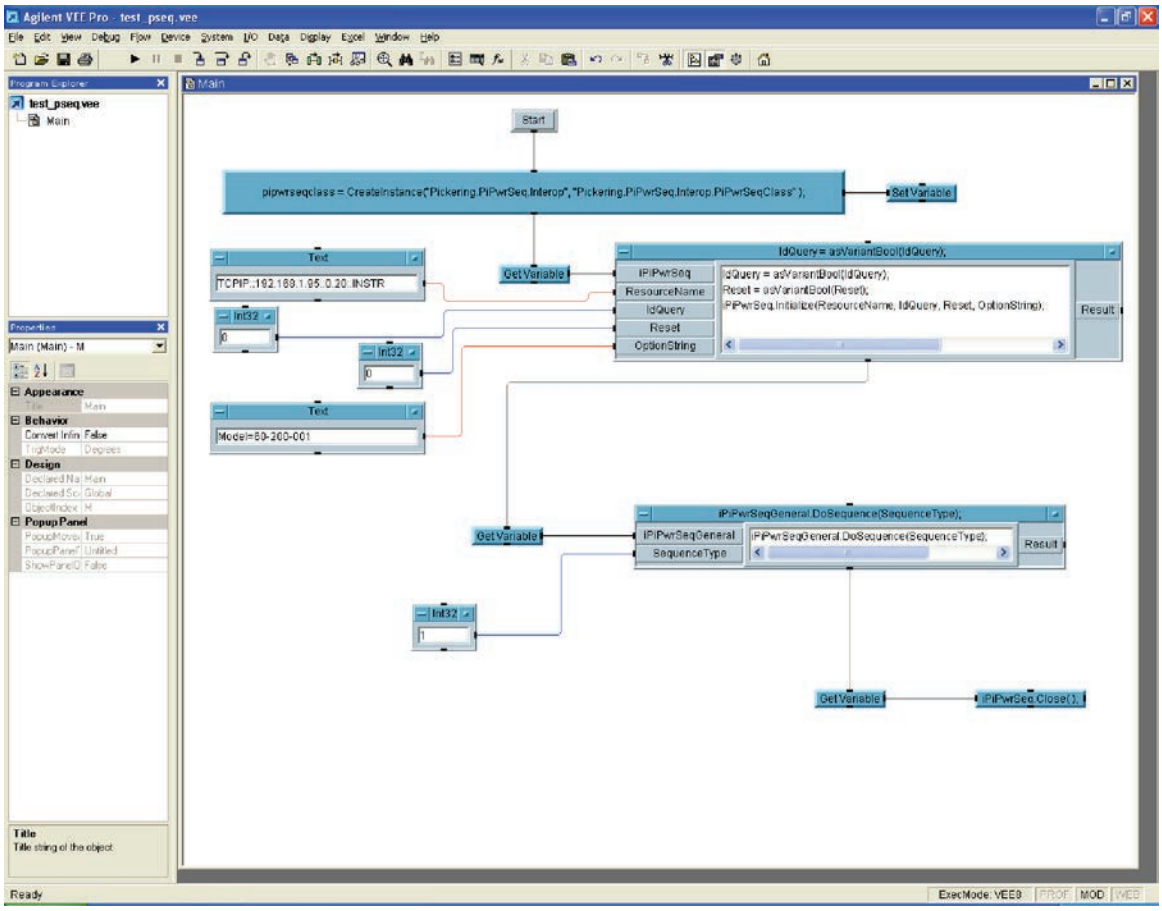

Figure 4-3. Using Agilent VEE to control the Power Management Switch

Section 5 - Connectors

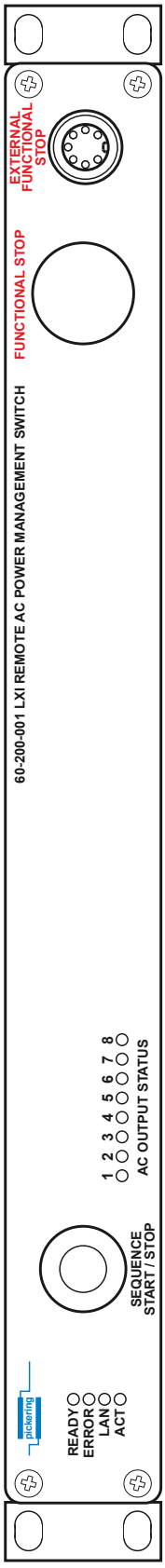

Figure 5-1. Front Panel Layout for the 60-200

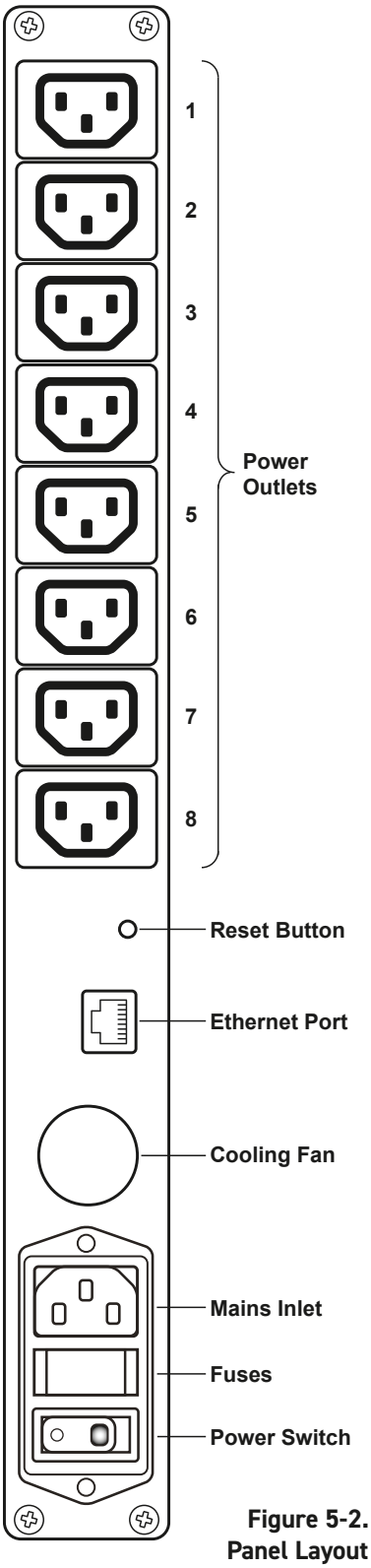

Figure 5-2. Rear Panel Layout for the 60-200

External Functional Stop Connector Wiring

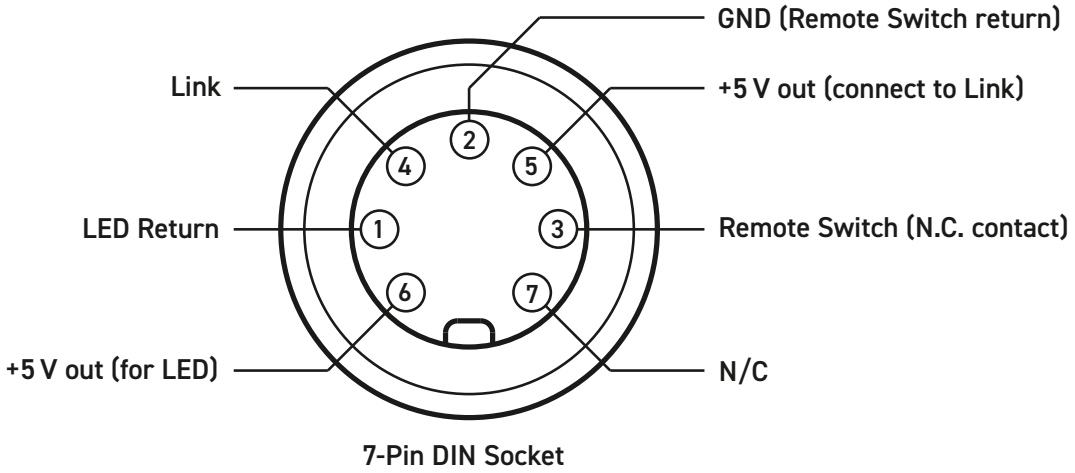

Figure 5-3. Pin-out for the Front Panel Mounted External Functional Stop Connector

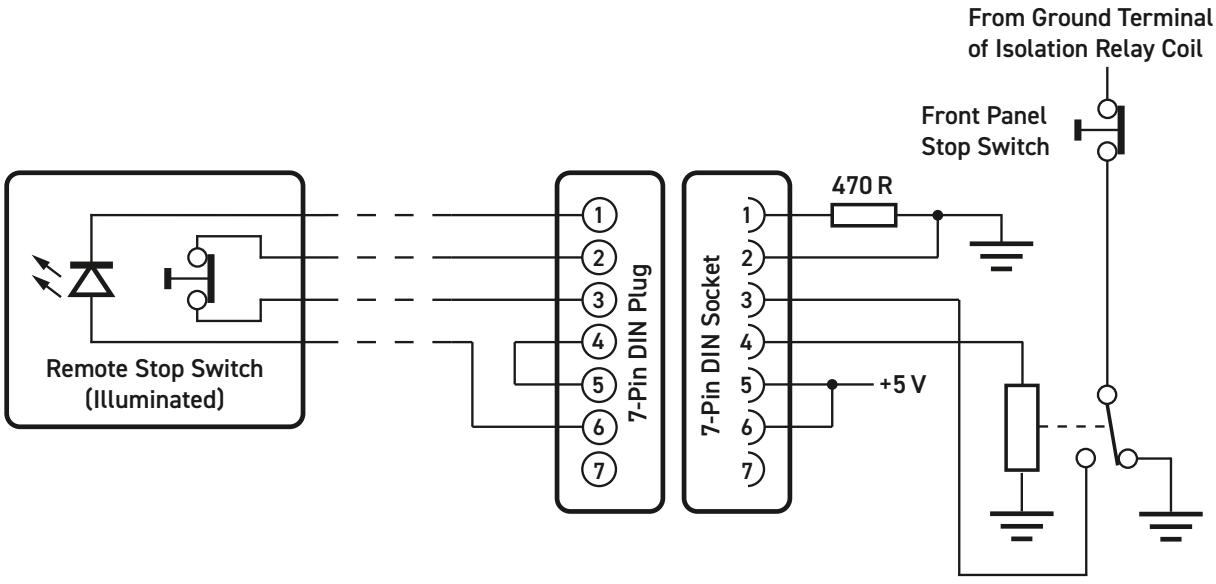

Figure 5-4. Diagram Showing the Wiring for the External Functional Stop Connector and the corresponding circuitry inside the Power Management Switch

Section 6 - Troubleshooting

Refer to the Warnings and Cautions at the front of this manual. 

LXI Status Indicators

Status Indicator / Colour				Status Description
PWR	RDY	ERR	LAN	
Green	Off	Off	Off	**Powering Up Status:** This state occurs when the LXI unit was turned off and the user turns it on. This state will exist for ~10-15 seconds.
Green	Orange	Orange	Orange	**PI Services Init. Status:** This state triggers after powering up status and it means that PI services are initialising (pilserv is starting and initialising). This state should last <1 second.
Green	Green	Off	Green	**Normal Operation Status:** LXI unit is turned on, Ethernet connection is established (LXI unit has assigned IP address from DHCP/AutoIP or static range), ServerBridge is running and listening for incoming connections.
Green	Green	Off	Red	**Network Failure Status:** LXI unit is turned on, but the Ethernet connection is not established (LXI unit is not connected to any network and it has not assigned an IP address). Client cannot access the unit or control any of the plugged in cards.
Green	Off	Red	Green	**ServerBridge Failure Status:** LXI unit is turned on, Ethernet connection is established (LXI unit has assigned IP address from DHCP/AutoIP or static range), ServerBridge is not running. Client can access the LXI unit thru the web interface, but cannot control any of the plugged in cards.
Green	Off/Green (toggling between off & green)	Off/Red (toggling between off & red)	Green	**ServerBridge Failure Status:** LXI unit is turned on, Ethernet connection is established (LXI unit has assigned IP address from DHCP/AutoIP or static range), ServerBridge is still restarting. Client can access the LXI unit thru the web interface, but cannot control any of the plugged in cards. The cause of the fault is usually the pilpxi driver, either of the third party drivers: pi743/pxm78xx or a bug in ServerBridge.
Green	Green	Off	Orange	**Ethernet Change Notification Status:** LXI unit is turned on, Ethernet connection is changing. This is usually caused by user action: connected ethernet cable or LAN configuration change. ServerBridge is terminated in this state and waiting to establish the Ethernet connection.

Section 6 - Troubleshooting

Q I have a power light and a ready light, but why does the LAN light flash?
A You have an IP conflict. That is another device on your network has the same TCP/IP address as your LXI device. Remove the conflict or change the IP address of your LXI unit.

Q The power is on, but why doesn't the LAN indicator light up at all?
A There is a cabling fault. Check your Ethernet lead is of the correct type and is plugged into a working hub or switch. Most hubs and switches have a link indicator to show when the connection is correct.

Q Why do I only have a red error and power light on?
A There is a hardware fault with your device, contact your local sales office.
OR, the unit has been set with an invalid IP address. Obtain the required information as outlined in Section 4 and perform a full reset as described overleaf.

Q How do I know when I can begin communicating with my device?
A The LXI devices have a Ready and an Active light that indicate its current activity. Whenever the active light is illuminated, the system is busy and may not be able to process other commands. This will normally occur when there has been a TCP/IP configuration change. Constant green illumination of Active light can indicate Gigabit Ethernet connectivity.

Q What does it mean when my LXI device's lights are all on, or flash wildly?
A The system is booting up, these sequences are used to monitor the LXI device's boot progress as an aid to fault finding. Until the Ready light is illuminated green, you should not attempt to communicate with the device.

Q All of my device's lights are on, why don't I see a green Ready light, even after a few minutes?
A Your device has a fault, contact your local sales office.

Please contact your local Pickering Interfaces sales office for any further support or email:
lxisupport@pickeringtest.com

You can also visit our website for product updates, help and downloadable materials at:
http://www.pickeringtest.com

LAN Reset

If the device's operation is inconsistent the user should try resetting using the rear panel recessed LAN Reset button to see if this effects a cure.

Momentary operation of the LAN Reset button causes a reset of the device, this is similar in effect to cycling the power.

Holding the LAN Reset button depressed for a period of about 5 seconds causes the device to be set back to factory default conditions. This will destroy any user configuration data already entered.

Alternatively, if operation over a network is still in doubt, connect the device to a laptop using the supplied grey crossover cable and set it up as described in "Configuring the LXI Device Isolated from a Network" in the "LXI Getting Started Guide" document.

Appendix A

Fitting Rack Mounting Flanges

Pickering's LXI units are supplied with mounting flanges to enable fitting into a standard 19 inch rack. The following procedure describes the attachment of the flanges to the unit's side extrusions, a No.1 cross head screwdriver will be required.

1. On the right hand side of the unit, remove the four countersunk screws that secure the two threaded strips in the upper and lower channels of the side extrusion.

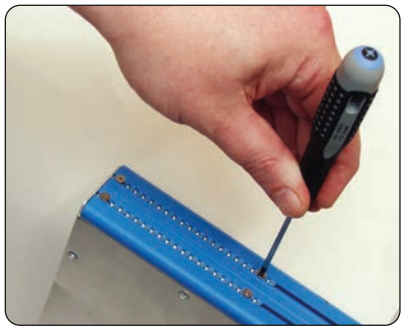

2. Make sure the threaded strips are as far forward as possible and touching the back of the front panel.

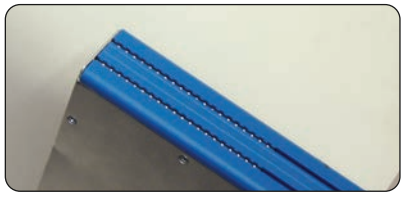

3. Take one of the two supplied flanges and place against the side extrusion so that the four screw holes line up with four threaded holes in the threaded strips.

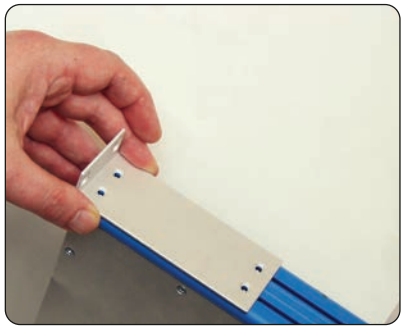

4. Loosely fit the four countersunk screws through the four holes in the flange and into the threaded strips.

5. Position the flange so that its front surface is aligned with the surface of the front panel.



6. Tighten the four countersunk screws so that the flange is secure against the side extrusion.

7. Repeat steps 1 to 6 on the left hand side of the unit using the second flange.

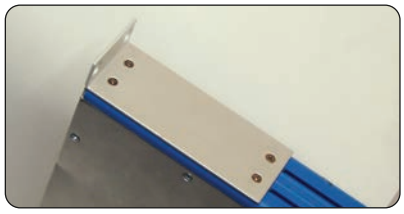

WARNING: The fixing holes in the front of the rack mounting flanges are designed only for securing the unit in the rack and must NOT be used to support the weight of the whole unit. The weight of the unit must be supported by side brackets, runners or a suitable equipment shelf.