65-233-2xx User Manual

LXI Modular High Voltage SPST Switch, 2.5 kV



© Copyright (2026) Pickering Interfaces. All Rights Reserved**.**

No part of this publication may be reproduced, transmitted, transcribed, translated or stored in any form, or by any means without the written permission of Pickering Interfaces.

Technical details contained within this publication are subject to change without notice.



FM38792

Technical Support

For Technical Support please contact Pickering Interfaces either by phone, the website or via e-mail.

Warranty

All products manufactured by Pickering Interfaces are warranted against defective materials and workmanship for a period of three years, excluding programmable power supplies, from the date of delivery to the original purchaser. Any product found to be defective within this period will, at the discretion of Pickering Interfaces be repaired or replaced.

Products serviced and repaired outside of the warranty period are warranted for ninety days.

Extended warranty and service are available. Please contact Pickering Interfaces by phone, the website or via e-mail.

Environmental Policy

Pickering Interfaces operates under an environmental management system similar to ISO 14001.

Pickering Interfaces strives to fulfil all relevant environmental laws and regulations and reduce wastes and releases to the environment. Pickering Interfaces aims to design and operate products in a way that protects the environment and the health and safety of its employees, customers and the public. Pickering Interfaces endeavours to develop and manufacture products that can be produced, distributed, used and recycled, or disposed of, in a safe and environmentally friendly manner.

Worldwide Technical Support and Product Information

Pickering Interfaces Headquarters

Stephenson Road, Clacton-on-Sea, CO15 4NL United Kingdom
Tel: +44 (0)1255-687900
e-mail: sales@pickeringtest.com

USA
Tel: +1 781 897 1710
e-mail: ussales@pickeringtest.com

France
Tel: +33 9 72 58 77 00
e-mail: frsales@pickeringtest.com

Germany
Tel: +49 89 125 953 160
e-mail: desales@pickeringtest.com

Sweden
Tel: +46 340-69 06 69
e-mail: ndsales@pickeringtest.com

Czech Republic
Tel: +420 558 987 613
e-mail: desales@pickeringtest.com

China
Tel: +86 4008 799 765
e-mail: chinasales@pickeringtest.com

Malaysia
Tel: +6012 833 7980
e-mail: aseansales@pickeringtest.com

Product Safety

Safety Symbols

The following safety symbols may be used on the product and throughout the product documentation.

Meaning/Description	Symbol
PROTECTIVE EARTH (GROUND) To identify any terminal which is intended for connection to an external conductor for protection against electric shock in case of a fault, or the terminal of a protective earth (ground) electrode.	
DANGEROUS VOLTAGE To indicate hazards arising from dangerous voltages.	
WARNING/CAUTION An appropriate safety instruction should be followed or caution to a potential hazard exists. Refer to the relevant instructions detailed within the product manual.	
HEAVY If this product is heavy reference should be made to the safety instructions for provisions of lifting and moving.	
STATIC SENSITIVE To indicate that static sensitive devices are present and handling precautions should be followed.	

Contents

Copyright Statement ..... (ii)

Technical Support and Warranty ..... (iii)

Product Safety ..... (iv)

Contents (this page) ..... (v)

Warnings and Cautions ..... (vi)

Section 1
Technical Specification 1.1

Section 2
Technical Description 2.1
- Functional Description 2.1
- Hardware Interlock 2.3

Section 3
Installation 3.1
- Installing the Unit 3.1

Section 4
Programming Guide 4.1
- Programming Options for Pickering LXI Units 4.1
- Programming the 65-233 ..... 4.2
- Programming Examples 4.4
- Using The Interlock Function 4.7
- SSH (Secure SHell) Interface 4.8
- Command Line Control 4.8
- Using the Soft Front Panel 4.8

Section 5
Connectors 5.1

Section 6
Sequence Service & Triggering 6.1

Section 7
Troubleshooting 7.1

Section 8
Maintenance Information 8.1
- Relay Look-up Tables 8.1

Appendix A
Interlock Connector Wiring A.1

Warnings & Cautions

WARNING - Hazardous Environments	Symbol
This product is not specifically designed for use in hazardous environments, for example in explosive atmospheres. If the product is to be used in hazardous environments we recommend that the user ensures suitable protective measures are taken.	

WARNING - Danger of Electric Shock	Symbol
This unit may contain hazardous voltages. Before removing the unit from the rack remove all supplies and disconnect user I/O signals. If the unit has removable modules, unused slots in the chassis must be populated with blanking panels to prevent access to user I/O signals that may be present. Blanking panels are available to order from Pickering. If the product is not used in this manner for example by using an extender card then additional care must be taken to avoid contact with exposed signals. Not to be used in safety critical circuits, refer to the Pickering Interfaces' terms & conditions of sale. This unit must not be used for the switching of Mains Circuits. For the switching of voltages up to the unit's full specification, Secondary Circuit power supplies and the Device Under Test must be fully isolated from the Mains Circuit and the safety earth. The chassis must be correctly installed and be connected to mains or factory safety ground, please refer to the installation section of this manual. 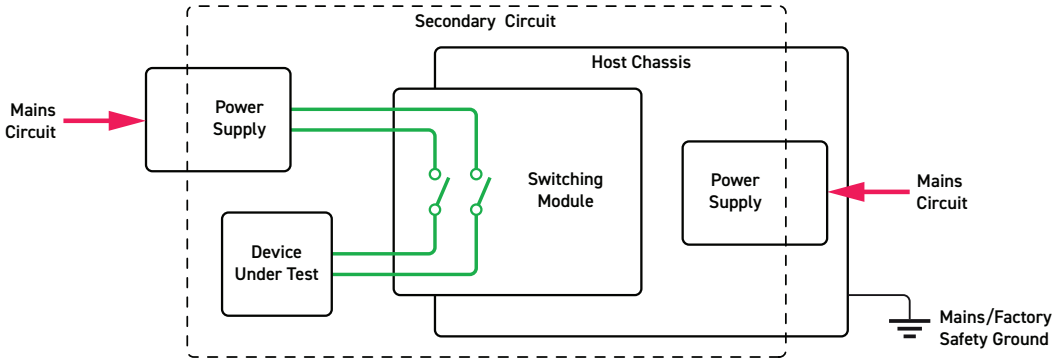 **Diagram Showing Separation Between The Mains Circuit and Secondary Circuit / DUT** For the purposes of this document, a Mains Circuit is an installation classified as Overvoltage Category II up to 300V. Separation between the Secondary Circuit and Mains Circuit is achieved by a transformer in which the primary windings are separated from the secondary windings by reinforced insulation, double insulation, or a screen connected to the protective conductor terminal.	

CAUTION - Handling of Electrostatic-Sensitive Devices	Symbol
Certain semiconductor devices used in this equipment are liable to damage due to static voltage. Observe the following precautions when handling these devices in their unterminated state, or sub-assemblies containing these devices: • Persons removing sub-assemblies from equipment using these devices must be earthed by a wrist strap and a resistor at the point provided on the equipment. • Soldering irons used during the repair operations must be low voltage types with earthed tips and isolated from the mains voltage by a double insulated transformer. • Outer clothing worn must be unable to generate static charges. • Printed Circuit Boards (PCBs) fitted with these devices must be stored and transported in anti-static bags.	

CAUTION - Product Documentation	Symbol
Suitably qualified & trained users should ensure that the accompanying documentation is fully read and understood before attempting to install or operate the product.	

Safety Instructions

Safety Instructions
All cleaning and servicing requires the equipment to be isolated and disconnected from the power source and user I/O signals (refer to the Maintenance Section). • Appropriate manual handling procedures should be followed as dictated by the weight of the individual module or the combined weight of the modules & chassis. • Should a fault occur with the module or chassis, immediately isolate and disconnect the incoming power to the chassis and the user I/O signals. • Ensure the equipment is installed, operated and maintained by trained and authorised personnel. • For suitably equipped products in the event of an emergency press the red "emergency stop" button situated on the front of the unit.



HIGH VOLTAGE SAFETY WARNING

This unit is capable of switching voltages and current that can cause serious injuries.

In applications involving high voltage it is strongly recommended that unused connectors are capped to prevent accidental contact while in use. System integrators and users should connect to the front panel user ports with connectors and cable assemblies that ensure operators will not inadvertantly come into contact with high voltage signals.

Section 1 - Technical Specification

- Modular Switch Design
- 10, 20, 30, 40 or 50 SPST Switches per Plug-in
- Cold Switch up to 2.5 kVDC/2.5 kVAC Peak
- Hot Switch up to 2.5 kVDC/2.5 kVAC Peak
- 0.25 A Hot Switch Current
- Maximum Power 50 W
- Dry Reed Switch Contacts With RFI Suppression for Long Life
- Hardware Interlock Provided
- Built-In Scan List Sequence Stores With Triggering Capability
- Fully Compliant to 1.5 LXI Standard
- 3 Year Warranty



The 65-233-2xx is a modular switching platform that provides a high voltage SPST solution with capability up to 2.5 kV.

Switch arrays are created by populating a 65-200 chassis with plug-in modules that provide access to the switches on 51-pin front panel connectors. Users can specify as many or as few plug-in modules as they require and can field upgrade the chassis to extend the number of switches.

A hardware interlock connector is provided on the front panel that prevents relay operation if a suitably wired mating connector is not fitted. This can, for example, be used to disable relay operation if the test system cabinet door is open.

The chassis supports up to 6 plug-in modules which are loaded into the chassis via the front panel, greatly improving flexibility and ease of maintenance.

Cooling for the 65-200 chassis is provided by rear fans and front air intakes ensuring no wasted space when the chassis is rack mounted. The cooling system is adaptive, ensuring the acoustic noise is minimised when used in quiet laboratory environments and low load conditions.

Configuring the Switch

To select the parts that needed to create a switching array simply:

- Specify a 65-200-002 Modular Switching Chassis.
- Add 65-233-2xx-HI SPST High Voltage Plug-in Modules as required.

Switch Path Manager (SPM) Signal Routing Software

The 65-233 comprises multiple separate smaller elements that can be combined to form the overall switch. To aid with the user experience the Pickering Switch Path Manager application can be used. This simplifies signal routing through switching systems and speeds up the development of switching system software. See page 8 of this datasheet for more information.

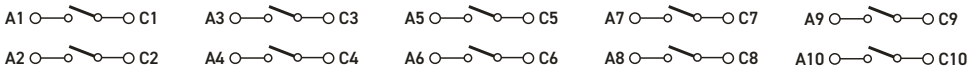

10xSPST High Voltage Switch Plugin Module
(Part No. 65-233-204-HI)

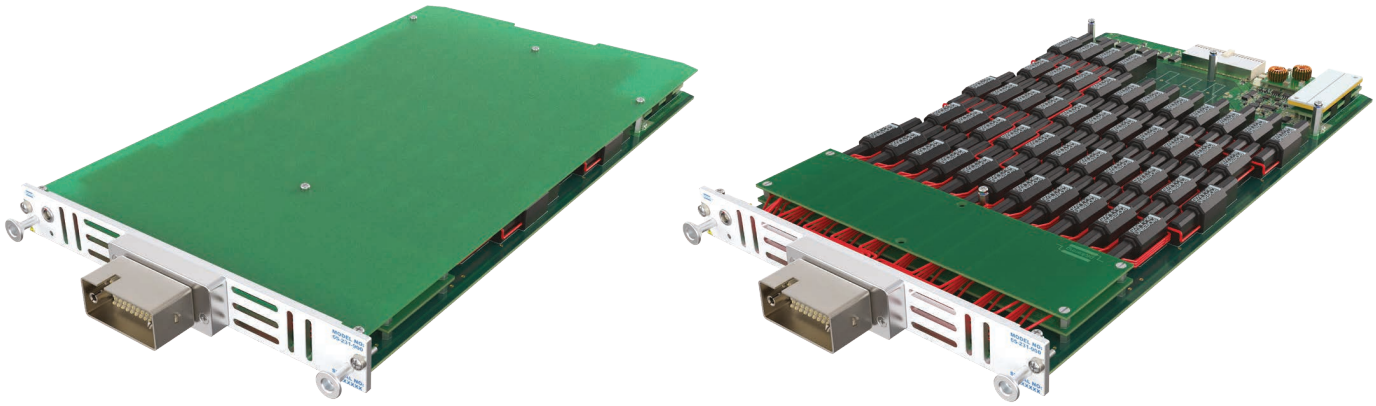

Example of a High Voltage Switching Plugin Module
With and Without Protective Cover

RFI Suppression

The 65-233 includes RFI suppression that extends relay contact life in hot switching applications and controls surges caused by high voltage transients in cold switching applications. The suppressors also ensure safe operation when connected to a high voltage source via cable assemblies that might otherwise generate additional transients or RFI problems.

The suppression components result in reduced bandwidth and slightly higher path resistance compared to standard designs (please refer to the switching specification table).

Please note, it is good practice to keep high voltage switching modules away from more sensitive units to minimize crosstalk.

Hardware Interlock

The 65-233 plug-in modules are fitted with a hardware interlock. The interlock, when activated, will return all relays to their default unpowered state (assuming the switches are fully functional) and also provide error notification via the software interface. The interlock feature can be daisy-chained between additional hardware interlock enabled modules for example to allow one signal to disable multiple cards. For further details please refer to the Hardware Interlock section within the user manual.

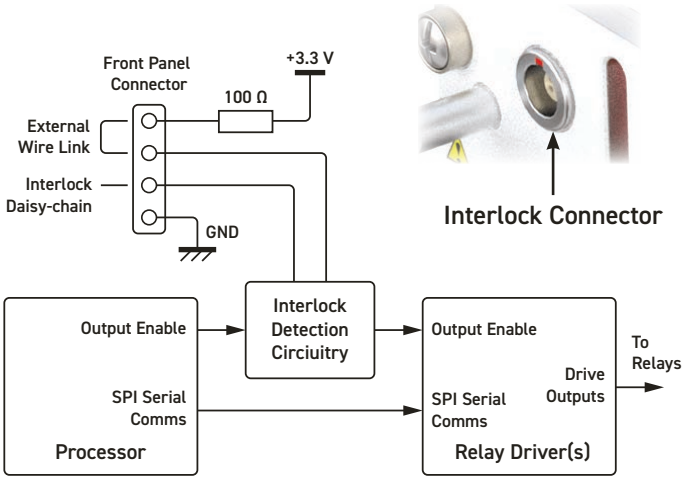

Interlock Signal Routing Diagram for 65-233

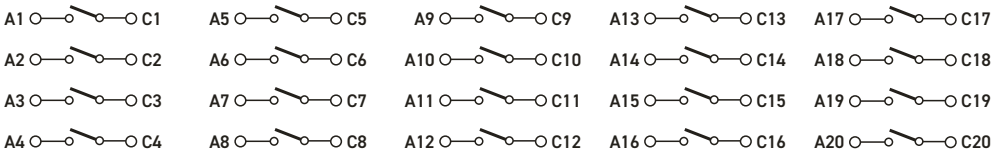

65-233-203-HI 20xSPST



65-233-202-HI 30xSPST

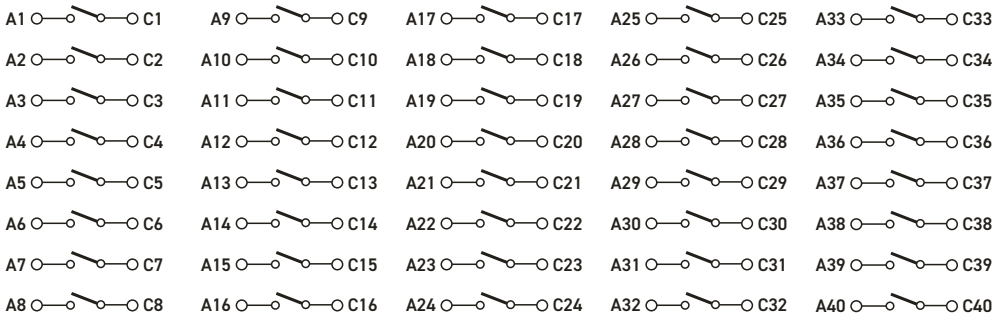

65-233-201-HI 40xSPST

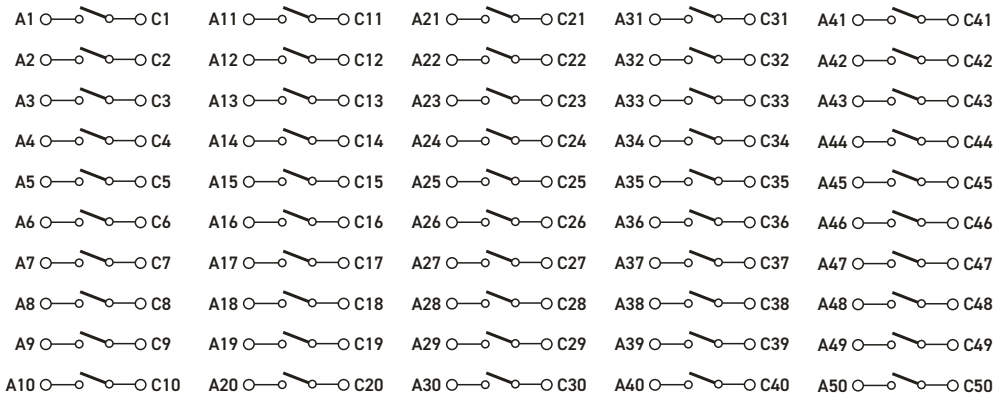

65-233-200-HI 50xSPST

Switching Diagrams For 65-233-2xx-HI High Voltage SPST Switch Plugin Module Range

Sequencing Service and Triggering

The Sequencing service provides the user with the ability to set a series of pre-determined sequences on an LXI instrument. These sequences can be triggered by software or one of the sixteen software configurable open collector triggers.

As the operations are grouped together, it will minimize the number of control transactions required to achieve a composite change of target switch state, condensing multiple operations in a single sub unit into a single operation, thus reducing the overall system switch settling time.

For example, if a user wants to operate X1-Y1, X4-Y1, X2-Y2, in the first sequence, only one operation, and so delay, will be used.

Additionally, as the switch state sequences are stored within the LXI controller itself, the burden on the Host CPU and Ethernet traffic is greatly reduced, and so the overall system latency is also reduced.

This unit features a software reset line which provides the ability for a user supplied reset to be applied to the unit, triggering a software reset of the relays, returning all relays in the unit to their default state. There is also a software fault line available that will be triggered if there is any error detected within the unit. Please note that while these reset and fault lines use dedicated physical connections to the unit, they are software control lines and as such should not be used for safety interlocks etc.

Speed of Operation

Speed of Operation can be important when defining systems for test applications, therefore it can be beneficial to understand all the necessary overhead delays associated with a switch operation.

If we consider a single relay / block relay operation, it can be considered to be a combination of five discrete operations: PC Processing, Ethernet Latency, LXI Processing / Virtualisation, Serial Loop Transmission and Relay Settling.

A representation of these processes can be seen in the diagram below.

For more information on the Pickering Sequence Manager please refer to our website.

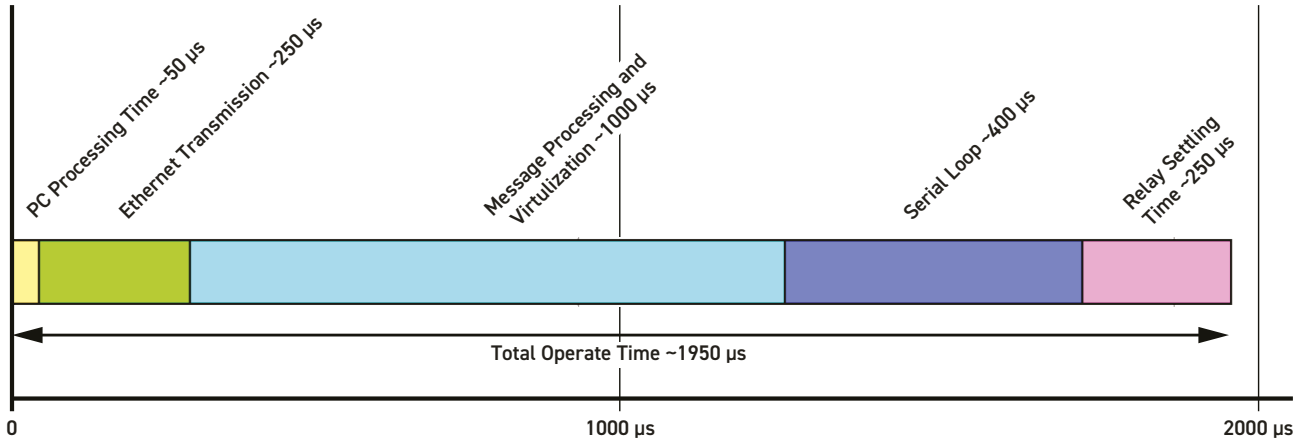

Speed of Operation Diagram For The 65-233
Note: These are estimated figures, PC processing and Ethernet transmission times may vary depending upon the overall system setup and load.

Section 1 - Technical Specification

Relay Type

The 65-233 is fitted with high quality tungsten reed relays specifically designed for very high voltage switching and are manufactured by our Relay Division: pickeringrelay.com

High Voltage Switching Specification

Switch Type:	Tungsten Reed
Max Hot Switch Voltage: Max Cold Switch Voltage: Max Hot/Cold Switch Voltage: Test Voltage:	2.5 kVDC/2.5 kVAC peak*† 2.5 kVDC/2.5 kVAC peak*† 1.43 kVDC/1.43 kVAC peak*‡ 4.2 kV
Max Power: Max Hot Switch Current: Max Cold Switch Current:	50 W 0.25 A 0.25 A
Initial On Path Resistance: Off Path Resistance: Initial Off Path Resistance:	TBD $>250x10^{9}\ \Omega$ $\approx 1x10^{12}\ \Omega$**
Operate Time:	3 ms typical
Expected Life:	$>1x10^{7}$ operations

* For full voltage rating, signal sources to be switched must be fully isolated from mains supply and safety earth.

** This inital value decreases to the quoted Off Path Resistance figure as the relay temperature increases.

† Up to altitude of 2000 m

‡ Altitude from 2000 m to 5000 m

Note 1: Voltage specification as per EN 61010-1:2010; Table 6, clearances and test voltages for secondary circuits derived from mains circuits of overvoltage category II up to 300 V. Testing as defined in section 6.8.3.2.

Note 2: Specified voltage can only be supported when connectors are mated to all ports, it is not permitted to apply the rated voltage to an unmated connector interface.

RF Specification

Bandwidth (-3dB):	TBD	
Crosstalk (typical):	10 kHz: 100 kHz: 1 MHz: 10 MHz:	TBD TBD TBD TBD
Isolation (typical):	10 kHz: 100 kHz: 1 MHz: 10 MHz:	TBD TBD TBD TBD

Mechanical Specification

Chassis Dimensions:	2U rack mountable full width, depth 500mm
Number of Plug-ins Supported:	6 (in 65-200-002 chassis)
Plug-in Connectors:	Redel S series (51-pin) high voltage connector
Interlock Connector:	4-pin female 00 series connector (mating halfsupplied with module, to be wired by end user).
Trigger Connector:	25-pin male micro D-type
Chassis Cooling:	Front air intakes through plug-in module holes, temperature controlled speed adjustable fans

Power Source

Universal AC mains supply, 90-120/200-240 V 50-60 Hz.

Power Inlet:	Male IEC connector
Power Rating:	100 VA maximum
Fuse Rating:	(F) 5 A 250 V

LAN Interface

1000Base-T Ethernet Interface with a standard RJ-45 connector mounted on the rear panel. Compliant to LXI Standard 1.5

Triggering

16x Software Configurable Bidirectional Open Collector Triggers

1x Dedicated Software Reset Line

1x Dedicated Software Fault Line

Scan List Sequencing

Capable of storing 5000 predefined test sequences, loaded from the host Controller to the LXI unit at process initialization, with the ability to be triggered through software or from any of the sixteen software configurable triggers.

For more information on the Pickering Sequence Manager please refer to our website.

Operating/Storage Conditions

Operating Temperature:	0 °C to +55 °C
Humidity:	Up to 90 % non-condensing
Altitude:	5000 m
Storage Temperature:	-20 °C to +75 °C
Humidity:	Up to 90 % non-condensing
Altitude:	15000 m

Safety & CE Compliance

All modules are fully CE compliant and meet applicable EU directives:

Low-voltage safety EN61010-1:2010,
EMC Immunity EN61326-1:2013,
Emissions EN55011:2009+A1:2010.

Product Order Codes

Specify which modules are required to build the switch. Plug-in modules can be ordered for chassis already supplied.

Chassis	
2U Modular Switching Chassis, 6-Slot	65-200-002
High Voltage Switch Plug-in Module, 2.5 kV	
50xSPST, 2x 51-pin Redel Connectors	65-233-200-HI
40xSPST, 2x 51-pin Redel Connectors	65-233-201-HI
30xSPST, 2x 51-pin Redel Connectors	65-233-202-HI
20xSPST, 51-pin Redel Connector	65-233-203-HI
10xSPST, 51-pin Redel Connector	65-233-204-HI

Product Customization

Pickering products are designed and manufactured on our own flexible manufacturing lines, giving complete product control and enabling simple customization to meet very specific requirements.
Customization can include:

- Alternative reed relay types
- Mixture of reed relay types
- Alternative number of relays
- Different performance specifications

All customized products are given a unique part number, fully documented and may be ordered at any time in the future. Please contact your local sales office to discuss.

Connection Accessories

For a complete list of connection accessories and documentation for the 65-233 range please refer to our 51-pin Redel S series connectors datasheet (90-026HVD).

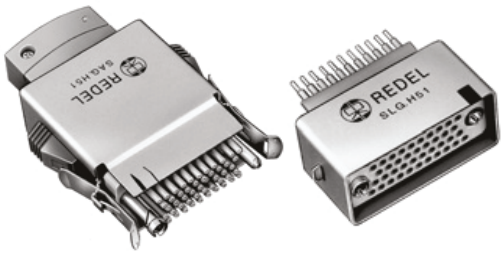

The 65-233 user connections are via front panel mounted high density 51-pin REDEL connectors. These are specifically designed for high voltage working.

Accessories - Interlock Connectors

Plug-in modules are supplied with a mating connector for the hardware interlock function, spare/replacement connectors can be ordered as follows:

4-pin cable assembly.	44-972-040-xm
Connector only, no internal wiring (replacing that supplied with the module)	44-960-040

Please refer to the 90-031D 4-pin GTx™ data sheet for details.
GTx is a trademark of Gigatronix Ltd.



The 65-233 is part of a growing family of Scalable Switching systems available from Pickering Interfaces. Illustrated is the LXI 65-219 Modular 2 Amp Matrix, available in sizes up to 60x40.



Available from Pickering are the 60-102C and 60-103B LXI Modular Chassis. These are 7 and 18 slot chassis capable of hosting any of our range of PXI switching and programmable resistor modules under LXI contol via a Gigabit Ethernet interface. Also available are the 60-104, 60-105 and 60-106. These are 2, 4 & 6 slot LXI/USB Modular Chassis which allow control of our PXI modules via Ethernet or USB.

Overview of "Hot" & "Cold" Switching Techniques

"Hot" Switching

This is when the load is switched with the high voltage source applied. Hot switching may generate considerable RFI, both within the switching module and on interconnecting wiring. Care must be taken to suppress or shield all cabling.

Note that any precaution which adds extra capacitance to a cable should be taken with great care, even a very small capacitance at high voltages can cause very large inrush current through the module resulting in possible switch weld and excessive RFI.

The 65-233 plugins include extensive built-in RFI suppression circuits that minimize RFI and surge problems.

"Cold" Switching – The Preferred Option for Reliability & Long Life.

With cold switching, the relay is operated before the high voltage source is applied. In this case the maximum carry current is much greater, also there will be much less stress on the reed relays, resulting in improved reliability and life.

Most high voltage sources include a soft start facility which reduces the likelihood of generating RFI or temporary over-voltage.

High voltage switching modules are often used for isolation testing applications (e.g. cable, transformer or semiconductor isolation tests), in these cases, cold switching is nearly always the preferred option to reduce the risk of high voltage transients that may cause premature breakdown.

Switch Path Manager Signal Routing Software

Our signal routing software, Switch Path Manager (SPM), simplifies signal routing through switching systems and speeds up the development of switching system software. Switch Path Manager supports our switching modules and the interconnection between them. Once a switching system model has been created, signal routing can be performed by simply defining the endpoints that are required to be connected together. The ability to automate signal routing results in simple and effective switching system management, safe and fast. The short circuit detection feature avoids unwanted shorts between routes.

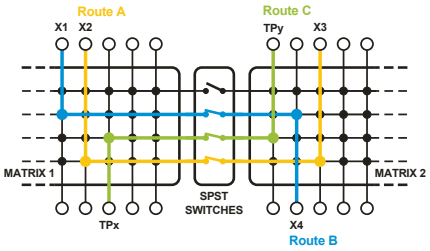

Switch Path Manager Signal Routing Example

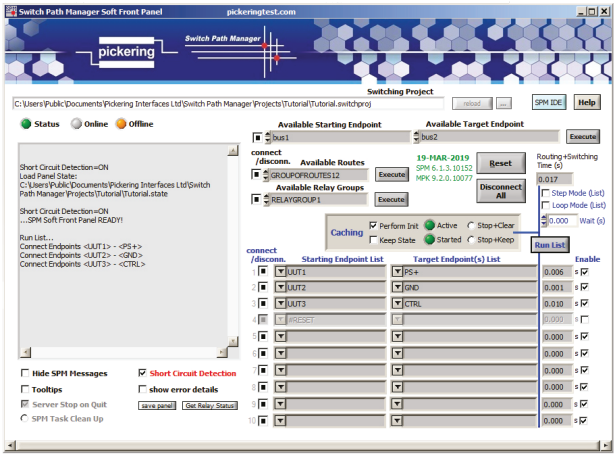

SPM Features:

- Manages Complex Switching Systems
- Reduces Switching Software Development Effort
- Debug Monitor and Manual Control Capability
- Supports all Pickering PXI, LXI and PCI Switching
- APIs available for C, C++, .NET, LabWindows™/CVI and LabVIEW
- Windows 32-bit or 64-bit Compatible
- Free Evaluation License
- Provides Switching Safety Features, including Short Circuit Detection and Endpoint Protection - see below:

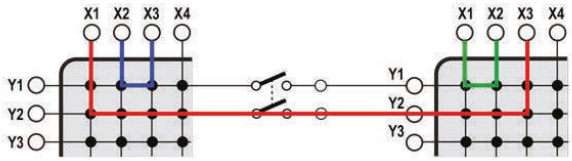

Short Circuit Detection - avoids shorting the blue path with the green path when trying to apply the red path via the 2-pole relay.

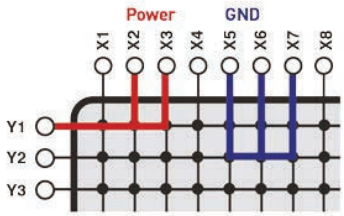

Endpoint Protection - prevents accidental connection of critical nodes such as Power or Ground (Y1, X2, X3) and (X5, X6, X7) are attributed to different Protection Groups in SPM. The software will not allow pins in different groups to be connected together.

Switch Path Manager is available in a full version and a lower-cost lite version. For more informaion please visit our Switch Path Manager web page.

Section 2 - Technical Description

Functional Description

The 65-233 is a modular switching system based on the 65-200 chassis and is designed to provide a high voltage flexible SPST switching solution by the addition of plugin modules. The component parts are as follows:

- The modular 65-200 chassis is the basis of the system and consists of a backplane, power supply and controller card housed in a 2U rack mountable chassis. The backplane is capable of hosting up to 6 plugin modules and distributes power and control signals between the plugins. The backplane's analog that bus that links the plugin modules is not implemented in this application. The controller card is based on an embedded processor and provides control and management of the switch via an LXI compliant LAN interface. For more information on the modular chassis, please refer to the 65-200 user manual.
- The 65-233-2xx-HI is a high voltage switching plugin module available in a range of configurations from 10xSPST to 50xSPST. Depending upon the configuration, either one or two front panel mounted 51-pin Redel S-series high voltage connectors carry the plugin's user connections. Due to the high voltage signals carried by these switches, the chassis backplane's analog buses are not used in this application. A hardware interlock function is included via a front panel mounted 4-pin connector. This allows normal operation if the appropriate pins are connected together and returns all relays to the default state if the connection is broken. The architecture of the high voltage SPST switch plugin module is shown in Figure 2-1. Diagrams for the switching configurations are shown in Section 1.

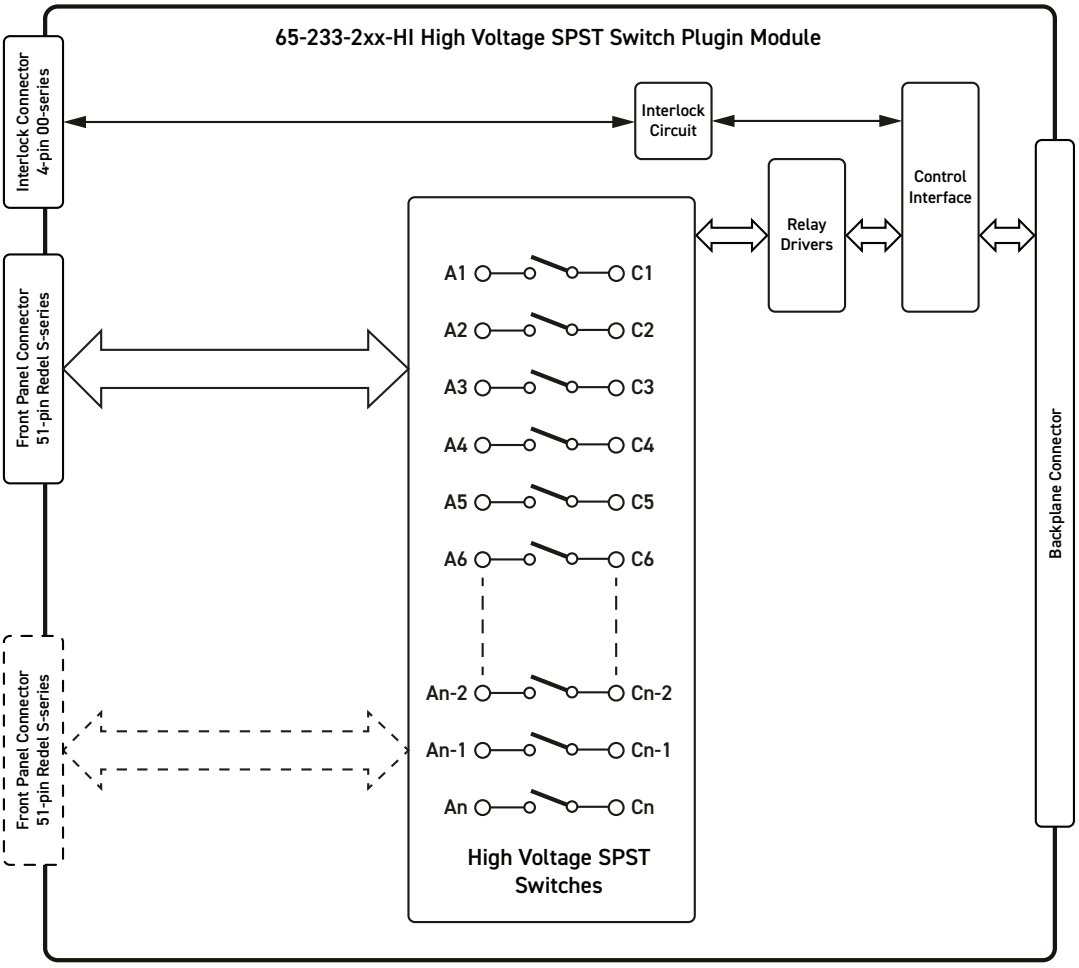

Figure 2-1. 65-233-2xx-HI High Voltage SPST Switch Plugin Module

Hardware Interlock

The 65-233-2xx-HI modules have an interlock feature that can be used to return the relays (assuming they are fully functional) to their default unpowered state if the interlock connector is not in place or if the connection between the two interlock pins is open-circuit.

Note: The mating half to the hardware interlock connector is supplied with the module in an unwired state, the user must implement the link connections as detailed in this section to permit operation of the module.

The user connector has the following control pins:

- Pin1: A 3.3 V output from a 100 Ω series protection resistor
- Pin2: An Enable pin which is by default pulled low by a 10 kΩ resistor.
  No relays will be switched by the module unless this pin voltage is raised to 3.3 V.
  The pin can be raised to 3.3 V by connecting to the supplied 3.3 V pin above. This is a global Enable for all the relays on the module. If the Enable pin is allowed to be set low then the module will continue to disable the relay operation until the software resets the channels to be on.
- Pin3: A Status Readback pin which is raised to 3.3 V when the Enable pin is set high AND the software has reset the module to enable relay control. This is available as physical signal on the user connector and its status can be read back by the software driver.
- Pin 4: A connection to PXI Ground

The interlock can be used in a variety of ways when multiple modules are used in a system:

- All the Enable pins can be linked together and a single switch used to pull the Enable high to 3.3 V. The enable pin can be pulled high using a user connection. The software driver can then enable or disable individual channels.
- All but one of the Enable pins can be connected together and connected to the Readback Status pin of one of the modules (Master Module). The Master Module then has its Enable pin connected high (3.3 V). To restart the system the software driver would then have to enable each module through the Master Module's Module Enable and then turn on each 65-233 through its Module Enable.
- Each module can be independently controlled by linking its Enable pin to its 3.3 V pin, if the user connector is disconnected or if the link between the interlock pins is open-circuit all the relays will return to the default unpowered state and will require restarting through its software driver control.
- The Status Readback output from one module can be connected to the Enable of the next module in the series chain. Disconnection of the user connector or if the link between the interlock pins is open-circuit will result in the relays of all the modules further returning to their default unpowered state. As in the previous cases when the user connection is re-established the software driver will need to restart the system.

It should be emphasized that if the Enable pin of the module is set low, even temporarily, the module will not automatically turn back on when the Enable returns high. The software driver must be used to turn the channels back on.

If required, spare / replacement hardware interlock connector(s) can be purchased, please refer to Support Products in Section 1 for details.

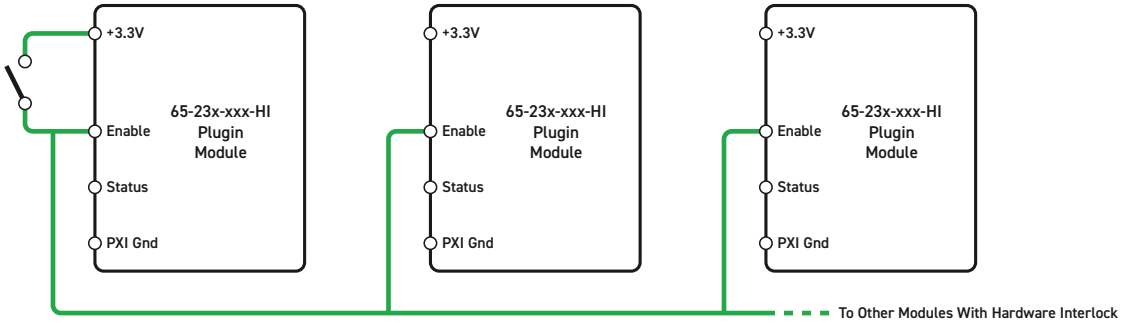

Figure 2.2 - All 65-233-2xx-HI Modules Enabled by a Common Signal

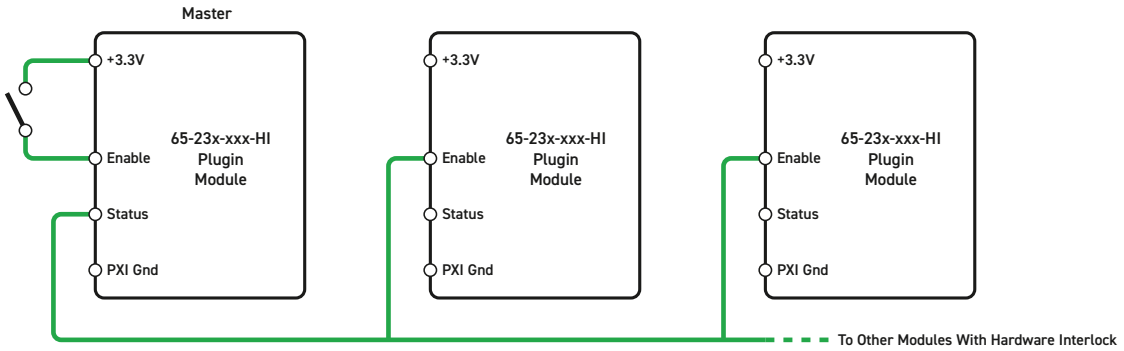

Figure 2.3 - 65-233-2xx-HI Modules Enabled by a Master Module

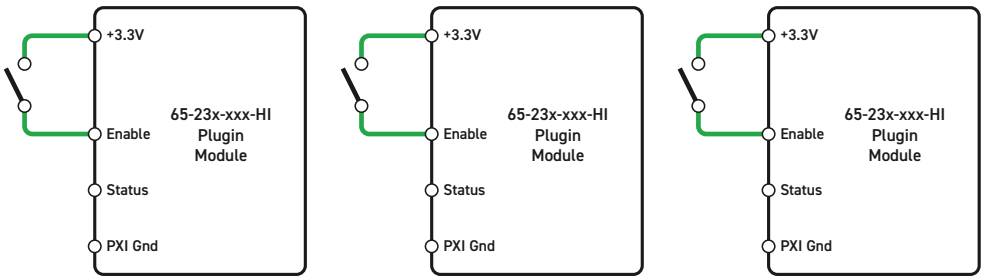

Figure 2.4 - Each 65-233-2xx-HI Module Enabled Independently

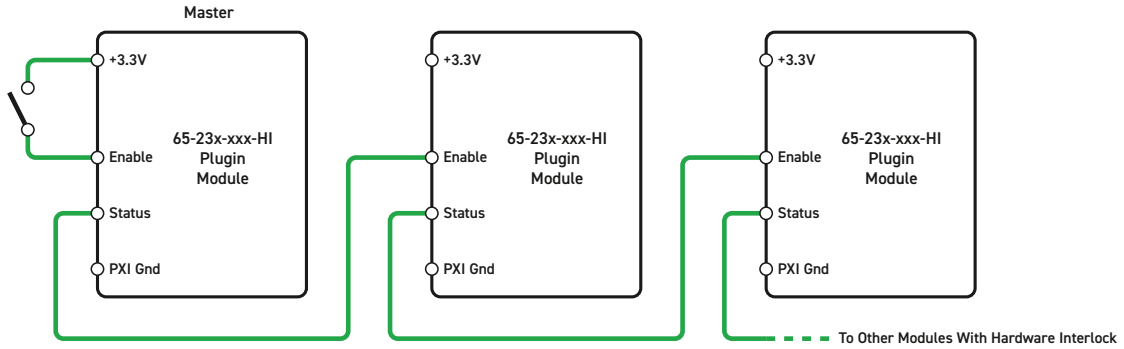

Figure 2.5 - 65-233-2xx-HI Module Enables Daisy-Chained From a Master

Section 3 - Installation

Refer to the Warnings and Cautions at the front of this manual 

The module is designed for indoor use only.

Pre-operation Checks (Unpacking) 

1. Check the module for transport damage and report any damage immediately to Pickering Interfaces. Do not attempt to install the product if any damage is evident.
2. Ensure that the designated area for the product is of flat and solid construction to support its weight.

Installing the Unit

For a full description for installing the scalable chassis and instructions for fitting and configuring the plug-in modules, please refer to the 65-200 user manual.

This can be downloaded via the web page:
https://www.pickeringtest.com/product/65-200-002-lxi-2u-modular-chassis-6-slot

HIGH VOLTAGE WARNING: When the 65-233 is connected to a test system, potentially leathal voltages may be present on any front panel connector - un-used connectors must be covered with the caps provided.

Section 4 - Programming

Programming Options for Pickering Interfaces LXI Units

For information on the installation and use of drivers and the programming of Pickering's products in various software environments, please refer to the Software User Manual.

This is available as a download from:
pickeringtest.com/support/software-drivers-and-downloads

Also, it can be accessed from the DVD supplied with the product:
<DVD_DRIVE>\downloads\Documentation\Software-Manual.pdf

Programming the 65-233

The 65-233 is a high voltage relay plugin module which in its fully populated form has 50 separate SPST switches. Versions are also available with 10, 20, 30 and 40 switches. The 65-200 host chassis can be supplied with between one and six SPST switch plugin modules which are electrically isolated from each other and are controlled by separate programming sub-units as shown in the graphic below:

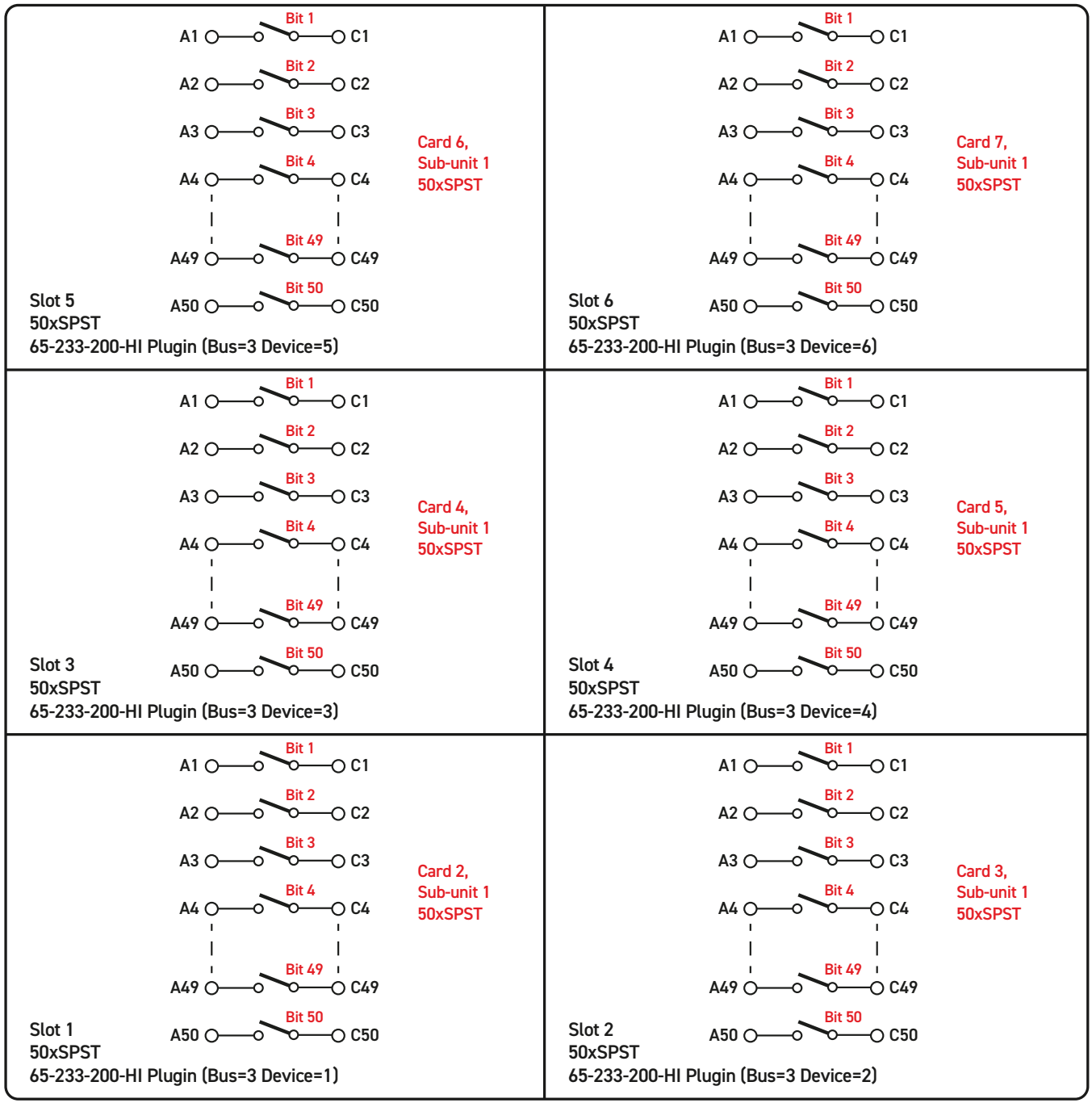

Figure 4-1. 65-233 Configured as 6 banks of 50 SPST Switches Using Six 65-233-200-HI Plugin Modules

Section 4 - Programming

The programming sub-units used for a chassis populated with six 50x SPST switches are summarised in the table below. Other plugins are available with 10, 20, 30 or 40 SPST switches .

Table 4-1. 65-233 Programming Sub-Unit Allocation

Card	Sub-Unit	65-200 Modular Chassis Populated With 65-233-200-HI Plugin Modules			
		Location in Chassis	Bus/Device	Function	Sub-Unit Type
1	—	Backplane	Bus=3 Device=0	Indication Only	N/A
2	1	Slot 1	Bus=3 Device=1	50x SPST Switches	SPST(50)
3	1	Slot 2	Bus=3 Device=2	50x SPST Switches	SPST(50)
4	1	Slot 3	Bus=3 Device=3	50x SPST Switches	SPST(50)
5	1	Slot 4	Bus=3 Device=4	50x SPST Switches	SPST(50)
6	1	Slot 5	Bus=3 Device=5	50x SPST Switches	SPST(50)
7	1	Slot 6	Bus=3 Device=6	50x SPST Switches	SPST(50)

Connections are made by operating the relays to create a signal path between the corresponding “A” terminal and the “C” terminal.

The following pages give very simple examples using two of the provided drivers: the Direct I/O driver piplx, and the IVI compliant driver pi40iv.

Programming Examples

Direct I/O Driver, piplx

The Direct I/O driver is in reality composed of a suite of separate libraries which interact to provide full control of a Pickering LXI unit. In the case of a switch card the communications library picmlx, and the switching library piplx, are needed.

Firstly a communication session to the LXI unit is established. This provides a session handle to the remote LXI unit which must be used in all subsequent communication with the unit.

Then a specified card on the remote LXI unit is opened and a handle to that card obtained, this handle must be used in all subsequent function calls to that card.

To operate a switch, the PIPLX_OpBit command may be used to select an individual output. The simplest way to clear a bank of switches is to call PIPLX_ClearSub. Any number of connection may be made on any individual switch sub-unit up to the maximum number of switches in that particular bank.

After use the card should be closed and the LXI session released to free the card and the LXI unit for other use.

```
DWORD err;
SESSION lxi_session;
DWORD card_handle;
DWORD sub_unit, bit;

err = PICMLX_Connect(0, "192.168.1.100",  1024, 2000, &lxi_session);

if (err == 0)
{
      err = PIPLX_OpenSpecifiedCard( lxi_session, 0, 5, &card_handle);

      if (err == 0)
      {
            sub_unit = 1;
            bit = 3;
            PIPLX_OpBit(lxi_session, card_handle, sub_unit,  bit, 1);

            PIPLX_CloseSpecifiedCard( lxi_session, card_handle);
      }

      PICMLX_Disconnect(lxi_session);
}
```

IVI Driver, pi40iv

Using the pi40iv driver, the pi40iv_InitWithOptions function should be used to establish a session on the switch card.

Switch closures are made using the pi40iv_Connect function and released using the pi40iv_Disconnect function.

The following code snippet demonstrates the minimum steps required to operate a switch on a Pickering LXI unit.

Firstly a device session is opened on the card located at bus 0, device 5 inside the LXI unit located at 192.168.1.100.

Then a closure of the first switch unit is made then disconnected.

Finally the session is closed.

```
ViSession vi;
ViStatus err;

ViRsrc rsrc_name = "TCPIP::192.168.1.100::0.5::INSTR";
ViString options = "Simulate=1,RangeCheck=1,QueryInstrStatus=0, \
Cache=1,DriverSetup=Model:65-233-200;";

err = pi40iv_InitWithOptions(rscr_name, VI_TRUE, VI_TRUE, options, &vi);


if (err == VI_SUCCESS)
{
      pi40iv_Connect(vi, "comA1", "chA1"););
      .
      .
      .
      pi40iv_Disconnect(vi, "comA1", "chA1");
}

pi40iv_Close(vi);
```

NOTES:

The channel names for the set of SPST switches will be as follows (for a unit fitted with 6 banks of 50xSPST):

```
comA - chA1          comB - chB1          comC - chC1
comA - chA2          comB - chB2          comC - chC2
comA - chA3          comB - chB3          comC - chC3
      ⋮                    ⋮                    ⋮
comA - chA49         comB - chB49         comC - chC49
comA - chA50         comB - chB50         comC - chC50

comD - chD1          comE - chE1          comF - chF1
comD - chD2          comE - chE2          comF - chF2
comD - chD3          comE - chE3          comF - chF3
      ⋮                    ⋮                    ⋮
comD - chD49         comE - chE49         comF - chF49
comD - chD50         comE - chE50         comF - chF50
```

Using The Interlock Function

The following functions are applicable to the hardware interlock feature of the 65-233-2xx-HI plugin modules.

Get the status of Interlock

Use the attribute "`ATTR_INTERLOCK_STATUS`", to the get the status of the interlock.

```
BOOL interlock = 0x0;   // Interlock Status of the card.

// Getting the Interlock status of the card
ErrCheck(PIL_GetAttribute(card, subunit, TRUE, ATTR_INTERLOCK_STATUS,
((BOOL*)&interlock)));

if (interlock == (BOOL)FALSE)
{
      printf(" Front Panel Interlock pins are not connected. Card is disabled \n");
}
else
{
      printf(" Front Panel Interlock pins are connected. Card is active \n");
}
```

Reset the interlock

Use the `ClearCard()` function to reset the interlock.

After the front panel pins for the interlock are inter connected, the function ClearCard() should be called so the Interlock pin connection is registered and card to be active for user.

```
// Resetting the Interlock status of the card
ErrCheck(PIL_ClearCard(card));
```

Note:
It's a good practice to have the `ClearCard()` function called as soon as the card is open for use in an application.

SSH (Secure SHell) Interface

Refer to the section "Command Line Control of Pickering LXI Instruments" in the 65-200 Scalable Chassis user manual for details of how to open this interface and general information on the command set available.

Command Line Control of Pickering LXI Instruments

For a description of command line control of a Pickering LXI device, please refer to the 65-200 Scalable Chassis user manual.

Using The Soft Front Panel

The unit can also be controlled via the General SFP application. For installation instructions as well as a generic description of the soft front panel operation, please refer to the 65-200 Scalable Chassis user manual.

The 65-200 Scalable Chassis user manual can be downloaded via the web page:
https://www.pickeringtest.com/product/65-200-002-lxi-2u-modular-chassis-6-slot

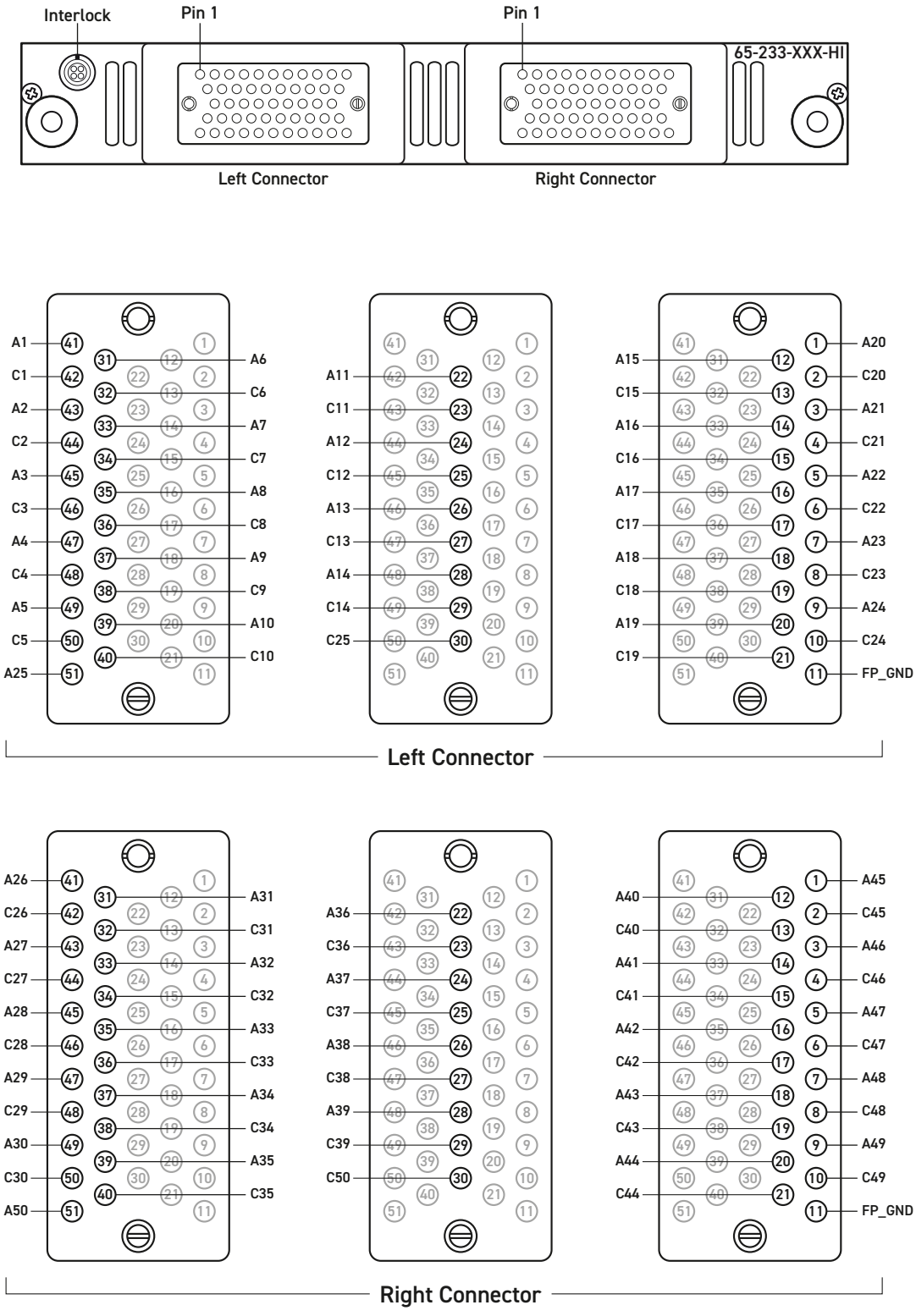

Figure 5-1. 65-233-200-HI 50xSPST Switch Plugin Module Pinout
(2x 51-pin Redel S-series connectors viewed from front of module)

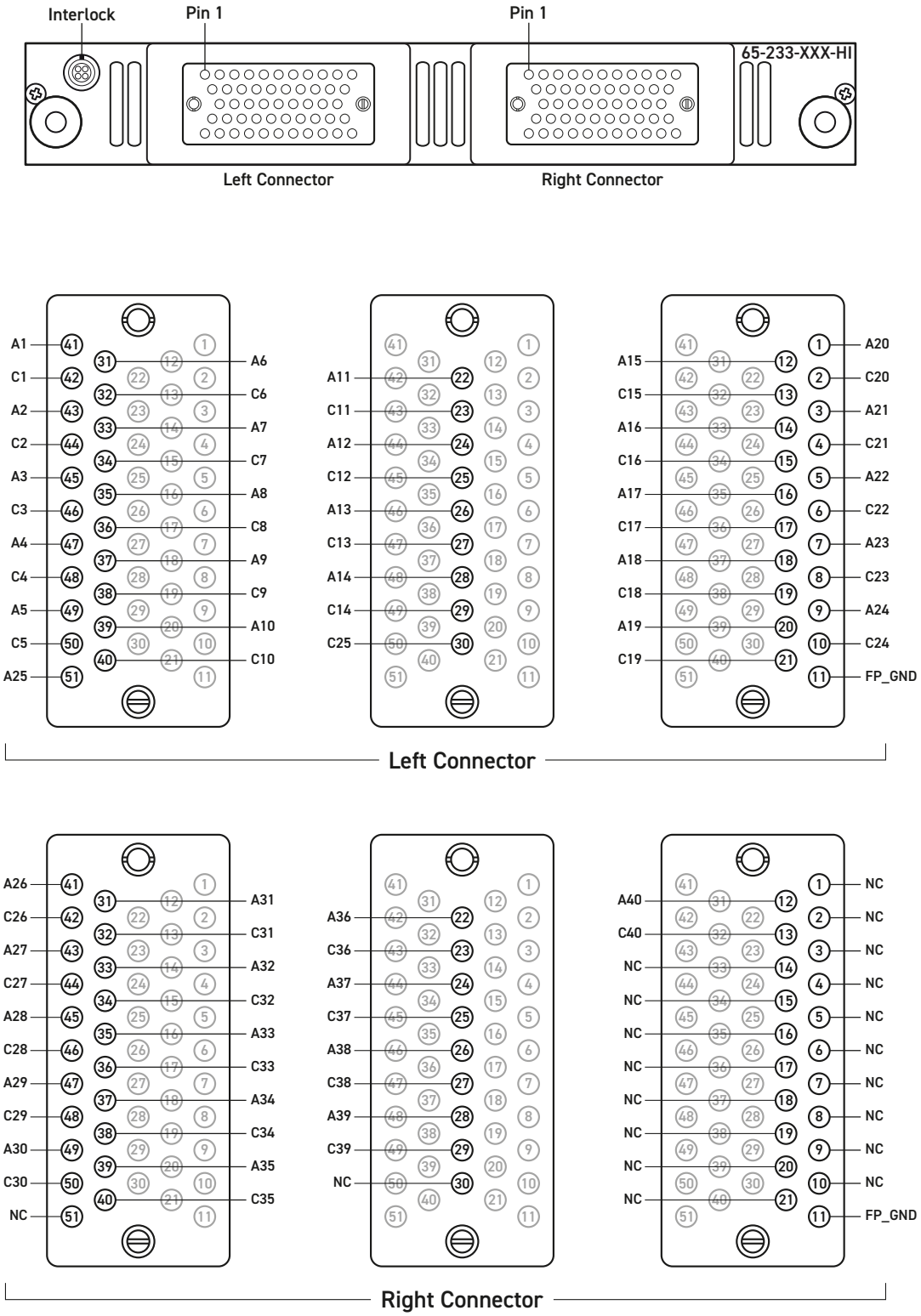

Figure 5-2. 65-233-201-HI 40xSPST Switch Plugin Module Pinout
(2x 51-pin Redel S-series connectors viewed from front of module)

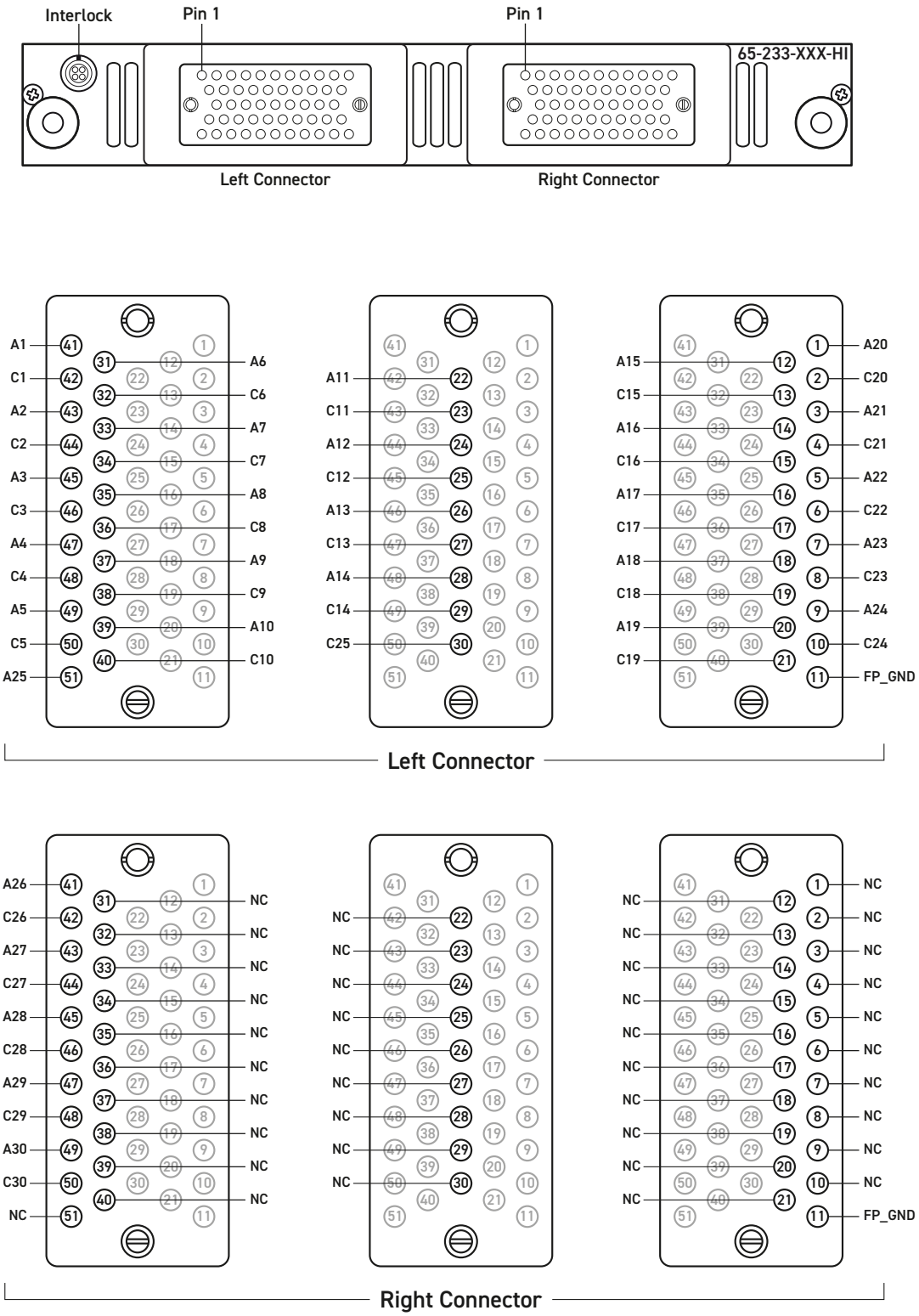

Figure 5-3. 65-233-202-HI 30xSPST Switch Plugin Module Pinout
(2x 51-pin Redel S-series connectors viewed from front of module)

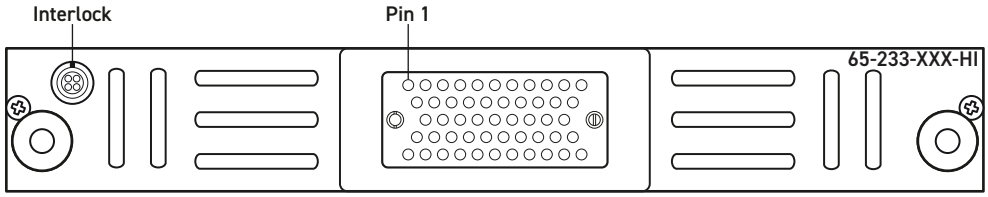

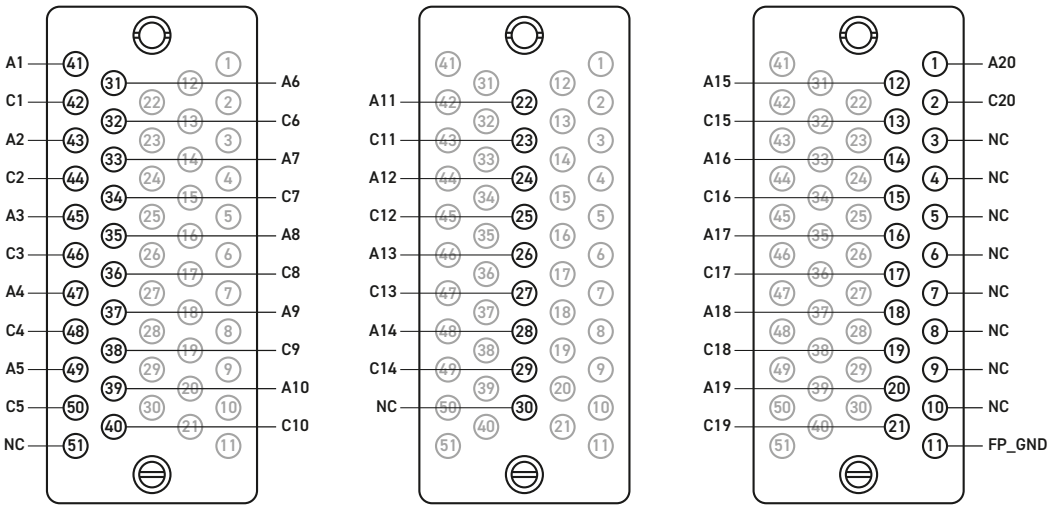

Figure 5-4. 65-233-203-HI 20xSPST Switch Plugin Module Pinout
(51-pin Redel S-series connector viewed from front of module)

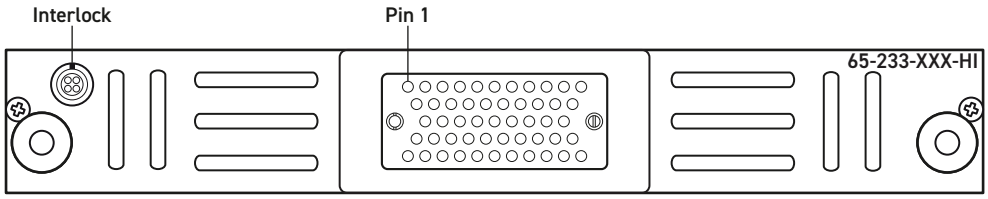

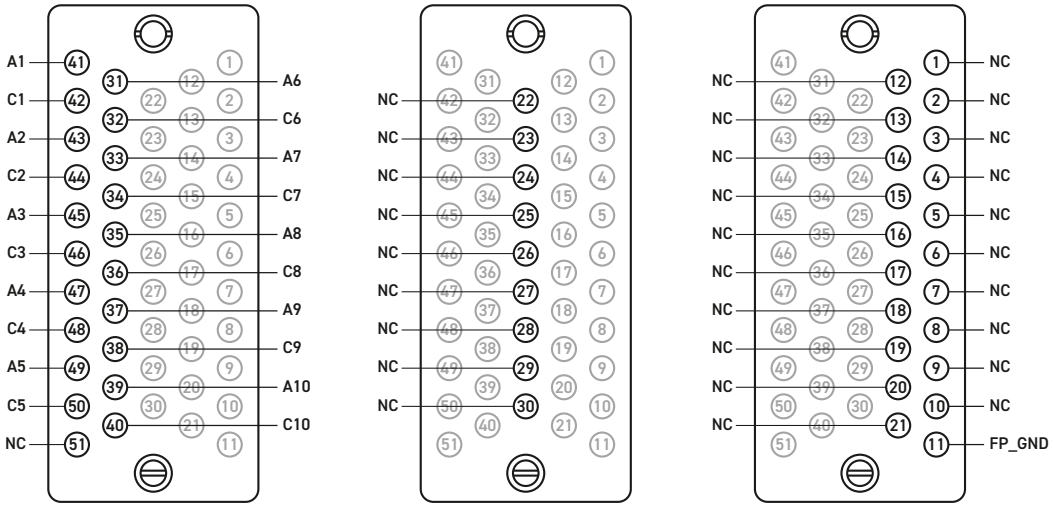

Figure 5-5. 65-233-204-HI 10xSPST Switch Plugin Module Pinout
(51-pin Redel S-series connector viewed from front of module)

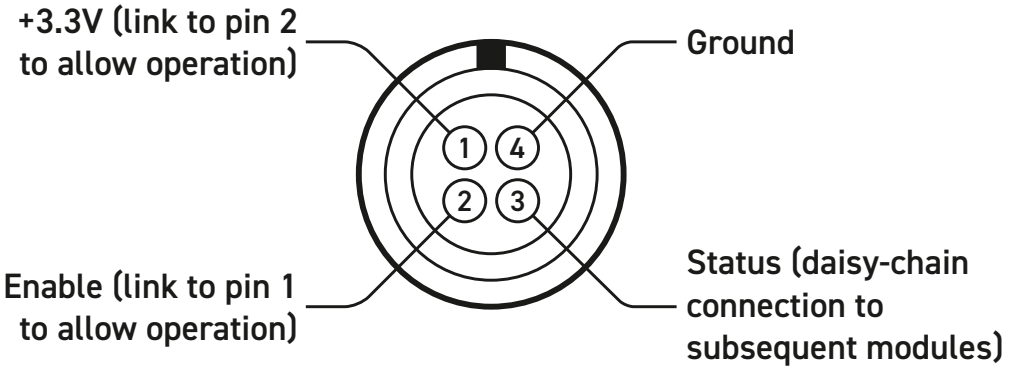

Figure 5.6 - Pinout: Hardware Interlock Connector
(4-pin 00 Series Female Connector Viewed From Front of Module)

Refer to Appendix A for Wiring and Assembly Instructions

Note 1: the maximum conductor size for the interlock connector is 30AWG

Note 2: The mating half to the hardware interlock connector is supplied with the module in an unwired state, the user must implement the link connections as detailed in this section to permit operation of the module.

Section 6 - Sequence Service & Triggering

Sequence Service & Triggering

For a description of the Sequencing Service and Triggering function as well information on the DIO/Trigger port, please refer to the 65-200 Scalable Chassis user manual.

The 65-200 Scalable Chassis user manual can be downloaded via the web page:
https://www.pickeringtest.com/product/65-200-002-lxi-2u-modular-chassis-6-slot

Section 7 - Troubleshooting

Refer to the Warnings and Cautions at the front of this manual. 

Installation Problems

The Plug & Play functionality of Pickering switch cards generally ensures trouble-free installation.

If you do experience any installation problems you should first ensure that all cables are properly connected

Troubleshooting Guide

For a troubleshooting guide for the LXI interface and LAN connectivity of the unit, please refer to the 65-200 Scalable Chassis user manual.

The 65-200 Scalable Chassis user manual can be downloaded via the web page:
https://www.pickeringtest.com/product/65-200-002-lxi-2u-modular-chassis-6-slot

Section 8 - Maintenance Information

Refer to the Warnings and Cautions at the front of this manual. 

Periodic Maintenance

This product and its corresponding chassis do not require any periodic maintenance.

General Cleaning

- Isolate the electrical power from the chassis and ensure that no user I/O signals are being applied.
- Wipe the product & chassis surfaces with a clean dry anti-static cloth only.

Software Update

No software updates are required for LXI products in normal operation. For the latest version of the driver please refer to our web site pickeringtest.com where links to our Software Download page will provide the latest version of the driver software for the various programming environments encountered.

Relay Look-up Tables

The following pages provide a cross reference between the signal paths of the product and the physical relays on the PCB, The tables can be used in the fault finding process and should be used in conjunction with the corresponding PCB layout diagrams to identify the positions of the faulty relays.

TABLE 8.1 - SPST Plugin Modules - Relay Reference

High Voltage SPST Switches					Relay No.
65-233-200-HI (50xSPST)	65-233-201-HI (40xSPST)	65-233-202-HI (30xSPST)	65-233-203-HI (20xSPST)	65-233-204-HI (10xSPST)	
A1/C1	A1/C1	A1/C1	A1/C1	A1/C1	RL1
A2/C2	A2/C2	A2/C2	A2/C2	A2/C2	RL2
A3/C3	A3/C3	A3/C3	A3/C3	A3/C3	RL3
A4/C4	A4/C4	A4/C4	A4/C4	A4/C4	RL4
A5/C5	A5/C5	A5/C5	A5/C5	A5/C5	RL5
A6/C6	A6/C6	A6/C6	A6/C6	A6/C6	RL6
A7/C7	A7/C7	A7/C7	A7/C7	A7/C7	RL7
A8/C8	A8/C8	A8/C8	A8/C8	A8/C8	RL8
A9/C9	A9/C9	A9/C9	A9/C9	A9/C9	RL9
A10/C10	A10/C10	A10/C10	A10/C10	A10/C10	RL10
A11/C11	A11/C11	A11/C11	A11/C11	–	RL11
A12/C12	A12/C12	A12/C12	A12/C12	–	RL12
A13/C13	A13/C13	A13/C13	A13/C13	–	RL13
A14/C14	A14/C14	A14/C14	A14/C14	–	RL14
A15/C15	A15/C15	A15/C15	A15/C15	–	RL15
A16/C16	A16/C16	A16/C16	A16/C16	–	RL16
A17/C17	A17/C17	A17/C17	A17/C17	–	RL17
A18/C18	A18/C18	A18/C18	A18/C18	–	RL18
A19/C19	A19/C19	A19/C19	A19/C19	–	RL19
A20/C20	A20/C20	A20/C20	A20/C20	–	RL20
A21/C21	A21/C21	A21/C21	–	–	RL21
A22/C22	A22/C22	A22/C22	–	–	RL22
A23/C23	A23/C23	A23/C23	–	–	RL23
A24/C24	A24/C24	A24/C24	–	–	RL24
A25/C25	A25/C25	A25/C25	–	–	RL25
A26/C26	A26/C26	A26/C26	–	–	RL26
A27/C27	A27/C27	A27/C27	–	–	RL27
A28/C28	A28/C28	A28/C28	–	–	RL28
A29/C29	A29/C29	A29/C29	–	–	RL29
A30/C30	A30/C30	A30/C30	–	–	RL30
A31/C31	A31/C31	–	–	–	RL31
A32/C32	A32/C32	–	–	–	RL32
A33/C33	A33/C33	–	–	–	RL33
A34/C34	A34/C34	–	–	–	RL34
A35/C35	A35/C35	–	–	–	RL35
A36/C36	A36/C36	–	–	–	RL36
A37/C37	A37/C37	–	–	–	RL37
A38/C38	A38/C38	–	–	–	RL38
A39/C39	A39/C39	–	–	–	RL39
A40/C40	A40/C40	–	–	–	RL40
A41/C41	–	–	–	–	RL41
A42/C42	–	–	–	–	RL42
A43/C43	–	–	–	–	RL43
A44/C44	–	–	–	–	RL44
A45/C45	–	–	–	–	RL45
A46/C46	–	–	–	–	RL46
A47/C47	–	–	–	–	RL47
A48/C48	–	–	–	–	RL48
A49/C49	–	–	–	–	RL49
A50/C50	–	–	–	–	RL50
–	–	–	–	–	RL51

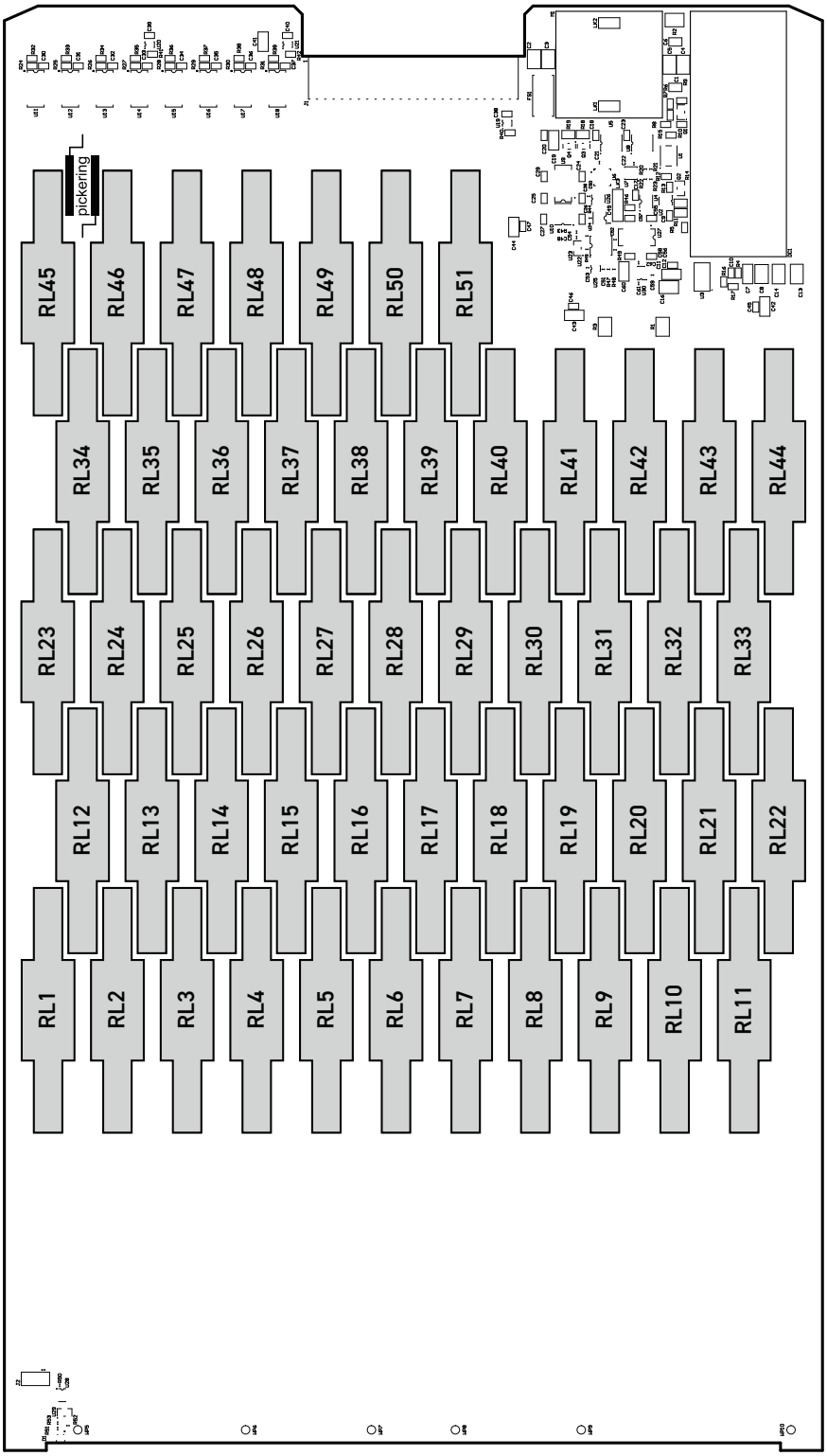

Figure 8.1 - High Voltage SPST Switch Plugin Module Component Layout

Appendix A

Interlock Connector Wiring

The following procedure describes the steps required for the wiring of the interlock connector supplied with versions of the module with the hardware interlock function.

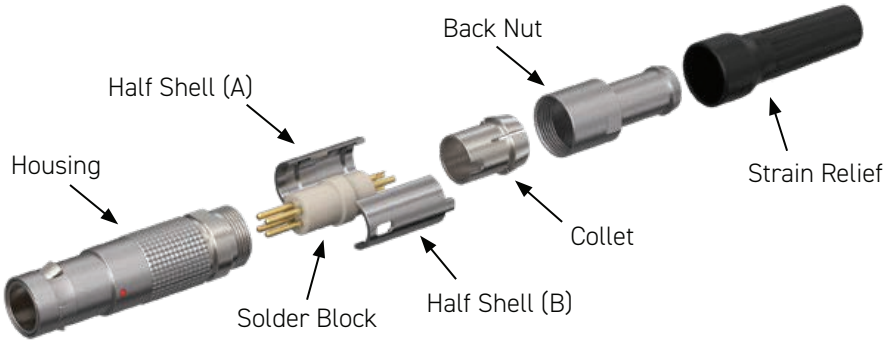

Position strain relief, back nut and collet on cable.



Strip outer jacket, braided screen and individual conductors. Refer to the guideline stripping dimensions shown.

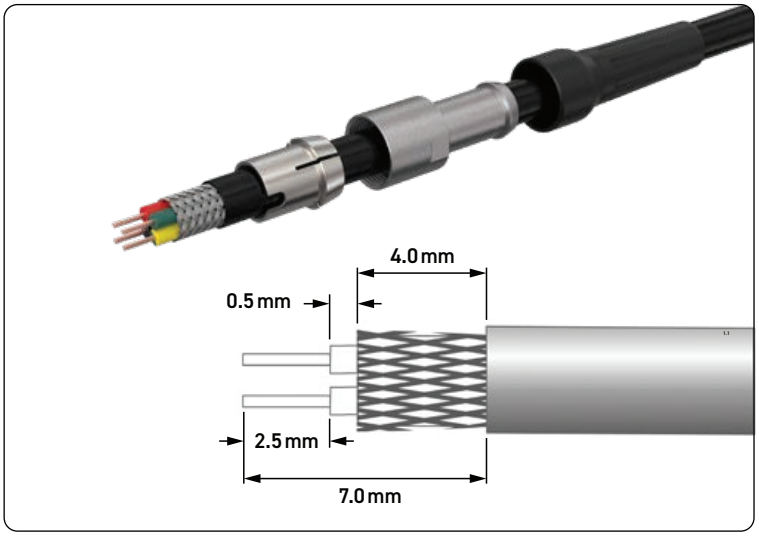

Solder terminate each individual conductor.



Appendix A

Fold back braided screen then position the half shells.
Note position of orientation lug/slot.

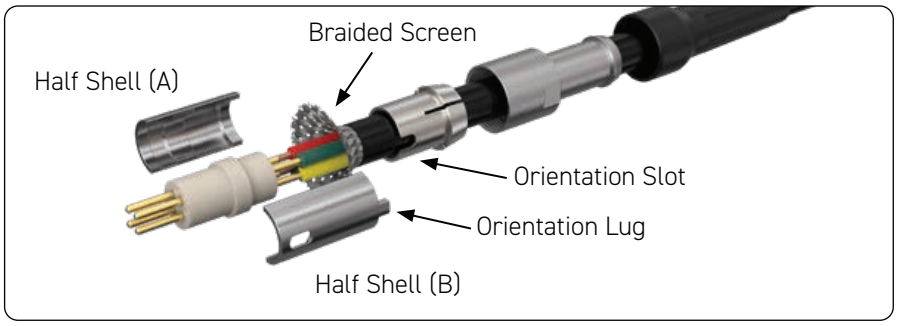

Slide the collet forward trapping the braided screen then trim.

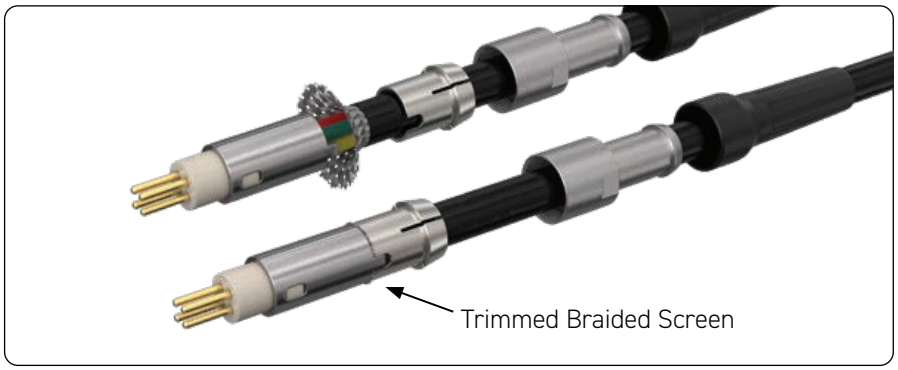

Insert sub-assembly into the plug housing. Note alignment of orientation lug with colored dot on the housing.

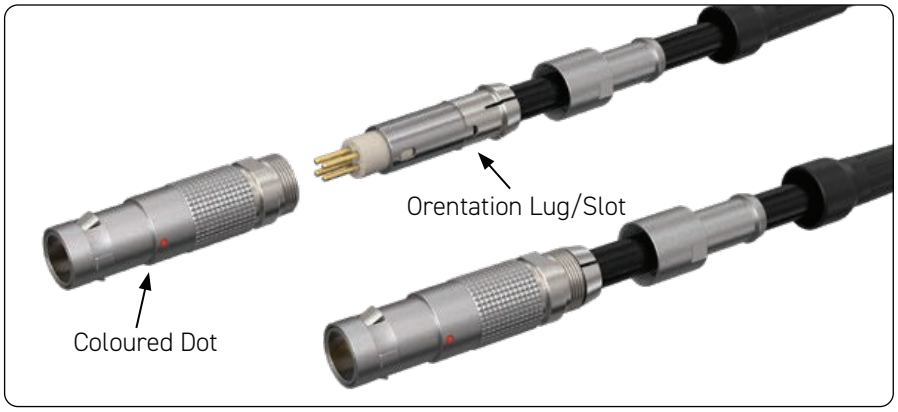

Apply suitable thread lock and secure the back nut to the recommended torque of 0.25 Nm.
Attach Strain Relief.

